ORDER NO. VRD9407M126

Service Manual

Video Cassette Recorder

General Description
Adjustment Procedures
Block/Schematic Diagrams
Exploded Views/Parts List

Panasonic VHS PAL NTSC

Hi-Fi HQ

NV-HD70AM
NV-HD77AM
NV-HD90EE

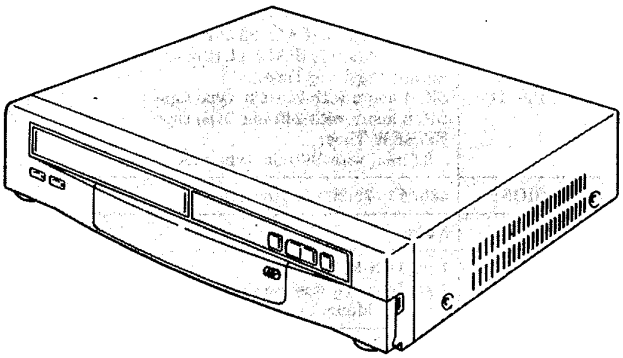

K-MECHANISM

MASTER
JUL. 6. 1994
持出厳禁

SPECIFICATIONS (NV-HD70AM, 77AM)

ITEM	SPECIFICATION
POWER	SOURCE: 110~240V 50/60Hz
	CONSUMPTION: 30 watts (NV-HD70AM) 32 watts (NV-HD77AM)
RECORDING SYSTEM	2 rotary heads, helical scanning system
	PAL/NTSC
TV TUNER SYSTEM	VHF I: CH2~CH4 (PAL B/SECAM B) CH1~CH5 (PAL D/SECAM D, KI) CH2~CH6 (NTSC M) VHF III: CH5~CH12 (PAL B/SECAM B) CH6~CH12 (PAL D/SECAM D, KI) CH7~CH13 (NTSC M) UHF: CH21~CH69 (PAL G, H, I/SECAM G, K) CH13~CH57 (PAL D) CH14~CH79 (NTSC M) 75Ω terminated
RF OUT SYSTEM	UHF: CH38$^{+2}_{-6}$ (PAL G, H, I/SECAM G, K) CH25$^{+2}_{-1}$ (PAL D) CH29~CH39 (NTSC M) 73±3dBμ, 75Ω terminated
VIDEO	HEADS: 4 rotary heads 1 pair for SP recording, playback and trick play (L-R heads) 1 pair for LP recording, playback and trick play (L'-R' heads)
	INPUT: VIDEO IN Connector (Phono type) 1.0Vp-p, 75Ω unbalanced
	OUTPUT: VIDEO OUT Connector (Phono type) 1.0Vp-p, 75Ω unbalanced

ITEM	SPECIFICATION
AUDIO	HEAD: 1 Stationary head (Normal Audio) 2 rotary heads (Hi-Fi 2CH)
	INPUT: AUDIO IN Connector (Phono type) More than −10dBV (316mV), more than 47kΩ
	OUTPUT: AUDIO OUT Connector (Phono type) −8dBV (400mV), Less than 1kΩ
	TRACK: 1 track (Normal-mono only) 2 channels (Hi-Fi Sound-Stereo)
TAPE FORMAT	VHS Cassette tape (Tape width 12.7mm)
TAPE SPEED	SP: 23.39mm/s (PAL), 33.35mm/s (NTSC) LP: 11.695mm/s (PAL), 11.12mm/s (NTSC) Record/Playback Time: SP: 4 hours with 240min. type tape LP: 8 hours with 240min. type tape FF/REW Time: 2.5min. with 180min. type tape
DIMENSIONS	430(W)×96(H)×349(D) mm
WEIGHT	5.0kg
STANDARD ACCESSORIES	1 pc. DIN-RF Cable 1 pc. Infra-red Remote Controller 1 pc. AC Mains Lead 1 pc. AC Plug Adaptor 1 pc. Separate Transformer Adaptor

Weight and dimensions shown are approximate.
Specifications are subject to change without notice.

Panasonic

A-6-42

SPECIFICATIONS (NV-HD90EE)

ITEM	SPECIFICATION
POWER	SOURCE: 220−240V AC 50/60Hz
	CONSUMPTION: 30 watts
RECORDING SYSTEM	2 rotary heads, helical scanning system
	PAL
TV TUNER SYSTEM	VHF I: CHR1~CHR5 (SECAM D) CHE2~CHS3 (PAL/SECAM B) VHF III: CHR6~CHR12 (SECAM D) CHM1~CHU10 (PAL/SECAM B) UHF: CH21~CH69 (PAL G/SECAM G. K) 75Ω terminated
RF OUT SYSTEM	UHF: CH38$^{+2}_{-6}$ (PAL/SECAM G. K) 73±3dBμ, 75Ω terminated
VIDEO	HEADS: 4 rotary heads 1 pair for SP recording, playback and trick play (L-R heads) 1 pair for LP recording, playback and trick play (L'-R' heads)
	INPUT: EURO AV Connector (21 pin) 1.0Vp-p, 75Ω unbalanced
	OUTPUT: EURO AV Connector (21 pin) 1.0Vp-p, 75Ω unbalanced VIDEO OUT Connector (Phono type) 1.0Vp-p, 75Ω unbalanced

ITEM	SPECIFICATION
AUDIO	HEAD: 1 Stationary head (Normal Audio) 2 rotary heads (Hi-Fi 2CH)
	INPUT: EURO AV Connector (21 pin) More than −6dBV (500mV), more than 10kΩ
	OUTPUT: EURO AV Connector (21 pin) −6dBV (500mV), Less than 1kΩ AUDIO OUT Connector (Phono type) −8dBV (400mV), Less than 1kΩ
	TRACK: 1 track (Normal-mono only) 2 channels (Hi-Fi Sound-Stereo)
TAPE FORMAT	VHS Cassette tape (Tape width 12.7mm)
TAPE SPEED	SP: 23.39mm/s (PAL), 33.35mm/s (NTSC) LP: 11.695mm/s (PAL), 11.12mm/s (NTSC) Record/Playback Time: SP: 4 hours with 240min. type tape LP: 8 hours with 240min. type tape FF/REW Time: 2.5min. with 180min. type tape
DIMENSIONS	430(W)×96(H)×349(D) mm
WEIGHT	5.0kg
STANDARD ACCESSORIES	1 pc. DIN-RF Cable 1 pc. Infra-red Remote Controller 1 pc. AC Mains Lead

Weight and dimensions shown are approximate.
Specifications are subject to change without notice.

INTRODUCTION

This service manual contains technical information which will allow service personnels to understand and service this model.
Section 1 presents you with technical know how for actual servicing and general information of features and controls, enabling you to become familiar with each function.
Section 2 presents to your mechanical and electrical adjustment information as well disassembly and replacement procedures.
In the case of very common information relating to other models like mechanical adjustments, please refer to the appropriate service manual.
Section 3, 4 contains block diagrams which provides you with information for checking and understanding each circuit. Schematic diagrams which give you detailed information such as waveforms, voltage data, function e.t.c. ...
Section 5 contains exploded views and parts list.
Please place orders using the parts list and not the drawing reference numbers.
If the circuit is changed or modified, this information will be followed by supplementary service manual to be filed with original service manual.

CONTENTS

SECTION 1 GENERAL DESCRIPTIONS 1-1

1-1. SERVICE INFORMATION 1-1
1-2. SERIAL CLOCK TRANSMISSION ERROR DISPLAY 1-6
1-3. SERVICE INFORMATION DISPLAY 1-7
1-4. OPERATING INSTRUCTIONS 1-16

SECTION 2 ADJUSTMENT PROCEDURES 2-1

2-1. DISASSEMBLY METHOD 2-1
2-2. MECHANICAL ADJUSTMENT PROCEDURES 2-4
2-3. DISASSEMBLY PROCEDURES OF MECHANISM 2-4
2-4. ASSEMBLY PROCEDURES OF MECHANISM 2-4
2-5. ELECTRICAL ADJUSTMENT PROCEDURES 2-7

SECTION 3 BLOCK DIAGRAMS 3-1

3-1. ABBREVIATIONS 3-1
3-2. SYSTEM CONTROL & SERVO BLOCK DIAGRAM 3-5
3-3. LUMINANCE & CHROMINANCE BLOCK DIAGRAM (NV-HD70AM, HD77AM) 3-9
3-4 LUMINANCE & CHROMINANCE BLOCK DIAGRAM (NV-HD90EE) 3-13
3-5 Hi-Fi AUDIO BLOCK DIAGRAM 3-17

SECTION 4 SCHEMATIC DIAGRAMS 4-1

4-1. POWER SCHEMATIC DIAGRAM 4-1
4-2. POWER C.B.A. 4-4
4-3. SYSTEM CONTROL & SERVO SECTION IN MAIN SCHEMATIC DIAGRAM 4-6
4-4 LUMINANCE/CHROMINANCE & AUDIO SECTION IN MAIN SCHEMATIC DIAGRAM (NV-HD70AM, HD77AM) 4-13
4-5. LUMINANCE/CHROMINANCE & AUDIO SECTION IN MAIN SCHEMATIC DIAGRAM (NV-HD90EE) 4-17
4-6. MAIN C.B.A. 4-21
4-7. TIMER C.B.A. & OPERATION C.B.A. 4-25
4-8. TIMER & OPERATION SCHEMATIC DIAGRAM 4-29
4-9 LUMINANCE & CHROMINANCE PACK C.B.A. (NV-HD70AM, HD77AM) 4-32
4-10. LUMINANCE & CHROMINANCE PACK SCHEMATIC DIAGRAM (NV-HD70AM, HD77AM) 4-35
4-11. LUMINANCE & CHROMINANCE PACK SCHEMATIC DIAGRAM (NV-HD90EE) 4-40
4-12. LUMINANCE & CHROMINANCE PACK C.B.A. (NV-HD90EE) 4-45
4-13. Hi-Fi AUDIO PACK SCHEMATIC DIAGRAM 4-48

4-14. Hi-Fi AUDIO PACK C.B.A. 4-51
4-15 NICAM DECODER SCHEMATIC DIAGRAM (NV-HD77AM) 4-54
4-16. NICAM DECODER C.B.A. (NV-HD77AM) 4-57
4-17 HEAD AMP SCHEMATIC DIAGRAM 4-61
4-18. HEAD AMP C.B.A. 4-63
4-19. DECODER PACK SCHEMATIC DIAGRAM (NV-HD70AM, HD77AM) 4-65
4-20. DECODER PACK C.B.A. (NV-HD70AM, NV-HD77AM) 4-67
4-21. DECODER PACK SCHEMATIC DIAGRAM (NV-HD90EE) 4-69
4-22. DECODER PACK C.B.A. (NV-HD90EE) 4-71
4-23. TV DEMODULATOR PACK SCHEMATIC DIAGRAM (NV-HD70AM, HD77AM) 4-73
4-24. TV DEMODULATOR PACK C.B.A. (NV-HD70AM, HD77AM) 4-75
4-25. TV DEMODULATOR PACK SCHEMATIC DIAGRAM (NV-HD90EE) 4-78
4-26. TV DEMODULATOR PACK C.B.A. (NV-HD90EE) 4-81

SECTION 5 EXPLODED VIEWS & PARTS LIST 5-1
5-1. EXPLODED VIEW & MECHANICAL REPLACEMENT PARTS LIST 5-1
1. CHASSIS PARTS SECTION (1) 5-1
2. CHASSIS PARTS SECTION (2) 5-3
3. CASING PARTS SECTION 5-4
4. PACKING PARTS SECTION 5-6
5-2. ELECTRICAL REPLACEMENT PARTS LIST 5-7

Technical Information

Subject: How to install the VPS DECODER (VW-VPS5E: NV-HD90EE)

1. Do not connect the video recorder to the AC outlet
2. Remove the 4 screws(A) and the Top Panel. (Fig. P1)
3. Remove the 2 screws(B), 3 screws(C) and unlock the tab(D). (Fig. P2)
4. Lift the Main C.B.A. up side down and lie it on the Cassette Compartment.
   Insert the VPS Decoder. (Fig. P3)

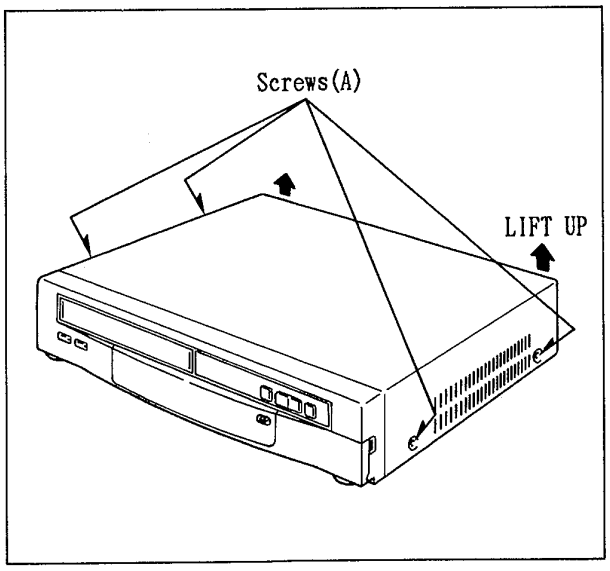

Fig. P1

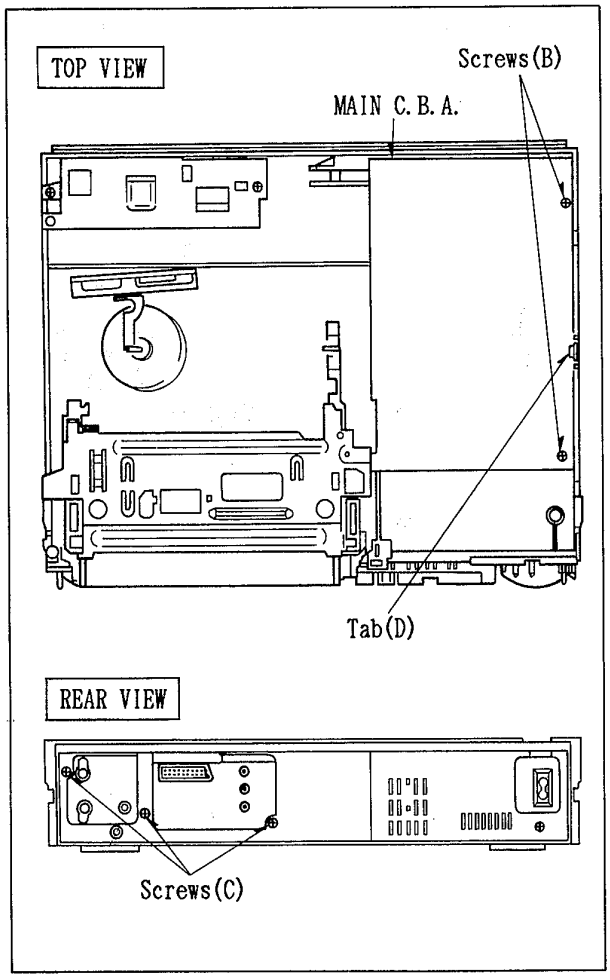

Fig. P2

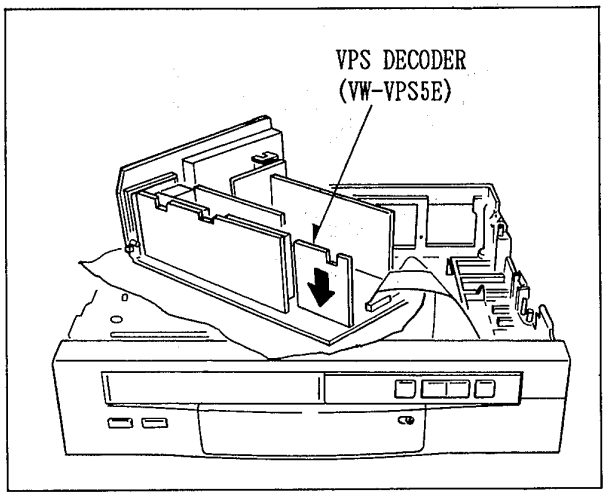

Fig. P3

SECTION 1
GENERAL DESCRIPTIONS

1-1. SERVICE INFORMATION

<A> MECHANISM SERVICE POSITION

When servicing the K-Mechanism, the Mechanism can easily be fixed by standing the Mechanism up in the Main Frame as shown below to check easily.

In this position, the following services are possible.

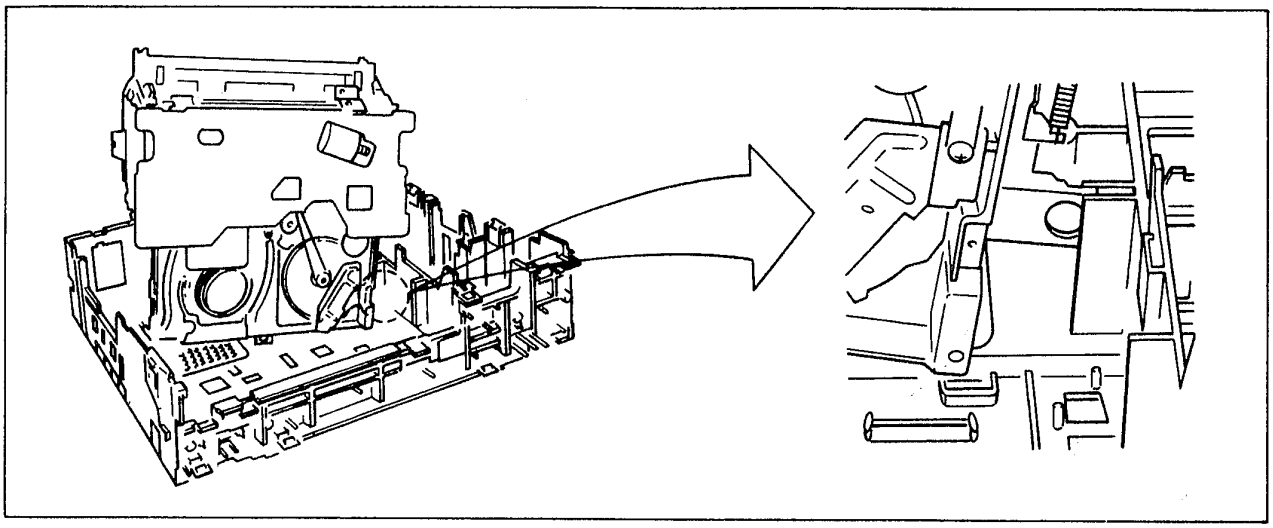

Fig. S1

<A-1>CHECKING OF GEAR PHASE ALIGNMENT CONDITION

1) Remove the Mechanism Connection C.B.A.
2) Check gear phase alignment condition of Mechanism described on the bottom side of Frame.

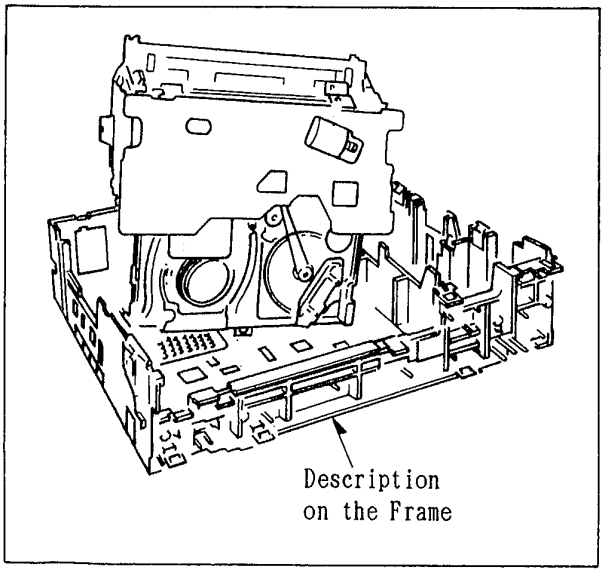

Fig. S2

<A-2> CHECKING OF LOADING / UNLOADING OPERATION

There are 3 methods for checking of loading/ unloading operation as follows.

(1) HAND OPERATION

1) Remove the Mechanism Connection C.B.A.
2) Turn the Worm Gear or the Worm Wheel Gear (Remove the Loading Motor Unit) manually.

(2) BATTERY OPERATION

1) Remove the Mechanism Connection C.B.A.
2) Connect the Battery (Manganes-Type R6(AA) 3pcs./+4.5V) to the Loading Motor terminals.

(3) SERVICE INFORMATION DISPLAY OPERATION

1) Set the Service Information Display mode. (Press the "FF","REW" and "EJECT" buttons simultaneously.)
2) Press the "FF","REW" and "EJECT" buttons 7 times to set the Service Mode 7.(The end of display on the Display becomes "--".)

3) In the above Service Information Display mode, the Loading Motor rotates for loading operation when the "PLAY" button is pressed. The Loading Motor rotates for unloading operation when the "STOP" button is pressed.

Remark:
Use the "SERVICE INFORMATION DISPLAY" mode for a final check of mechanism movement.

<A-3> CHECKING OF REEL GEARS OPERATION

1) Remove the Mechanism Connection C.B.A.
2) Move the mechanism to "PLAY" position by loading operation. (Refer to <A-2>)
3) Turn the "Rotor Unit" to check movement of reel gears.

<B> TUNER & TV DEMODU C B A.s SERVICE POSITION

Use the Extention Cables when checking.

PART NO.	PART NAME	PCS.	CONNECTION
VFK0944	5-PIN WIRE CABLE	3	PP7002-PS703 PP7003-PS702 PP7004-PS701
VFK0890	6-PIN WIRE CABLE	1	PP7001-PS704

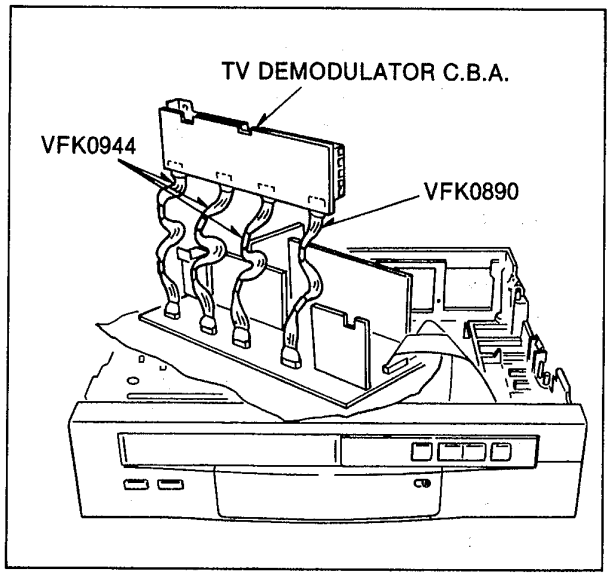

Fig. S3

<C> CYLINDER UNIT REPLACEMENT

The Cylinder Unit can be replaced easily by the following method.

1) Remove the Top Panel.
2) Remove the 3 screws of the Cylinder Unit with a magnetized screw driver through the holes on the Bottom Plate as shown in Fig. S4.

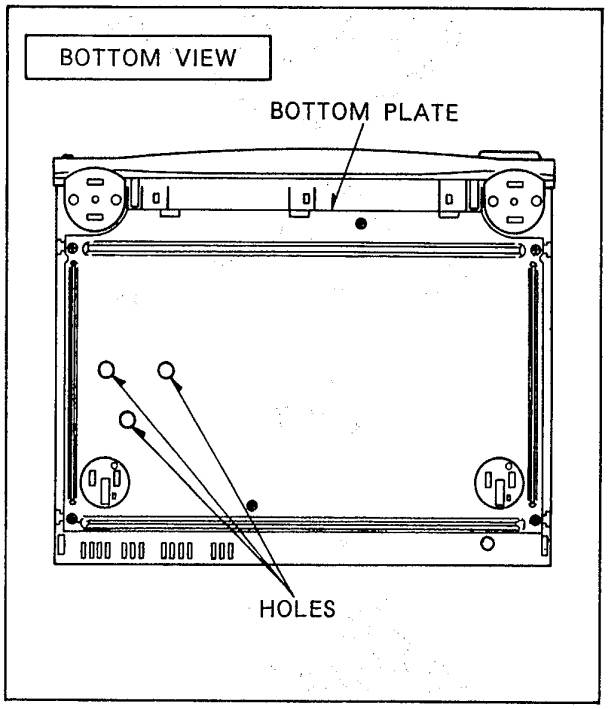

Fig. S4

<D> CAPSTAN STATOR UNIT ASSEMBLY

When replacing the Capstan Stator Unit, the CENTRE FIXING TOOL (VFK0851) must be used to fix the centre of Capstan Stator Unit.

Method:
1) Place the Capstan Stator Unit into position.
2) Loosely tighten the 3 screws.
3) Insert the CENTRE FIXING TOOL (VFK0851) as shown in Fig. S5.
4) Tighten the 3 screws.
5) Remove the CENTRE FIXING TOOL.

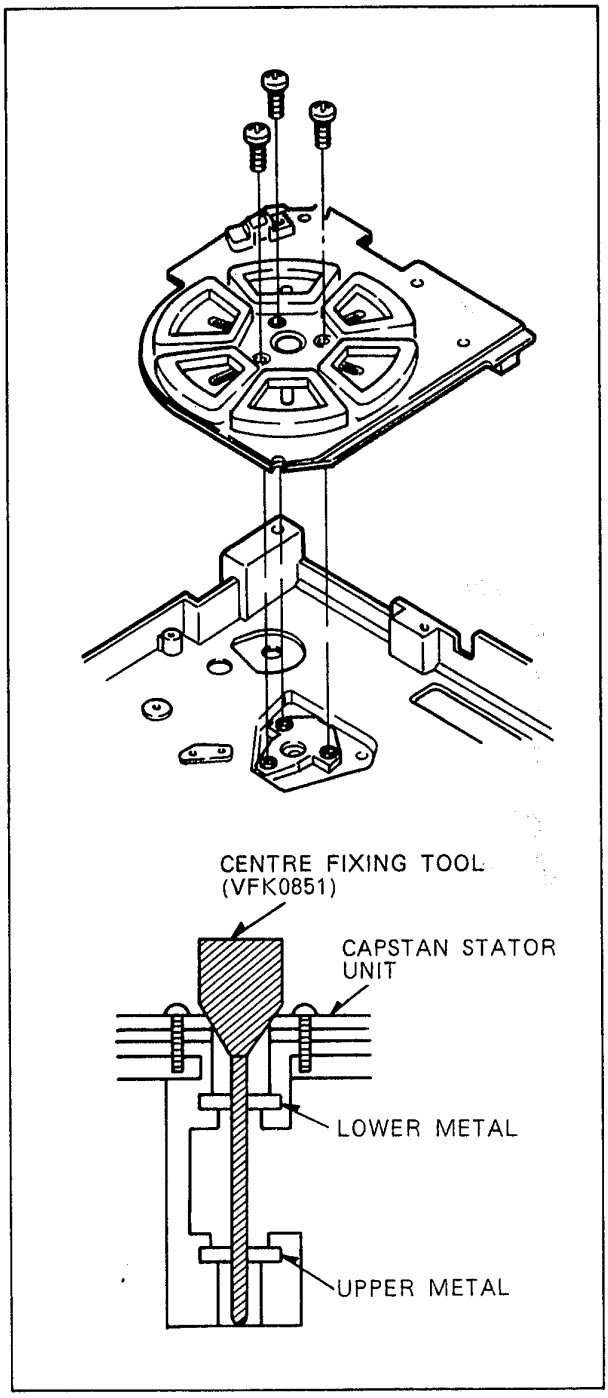

Fig. S5

<E> EJECT OPERATION

The main cam gear rotates in the direction of the arrow. The projection (B) of the carriage connection gear engages with the recession (A) of the main cam gear. The carriage connection gear rotates in the direction of the arrow to perform the Eject operation.

Note:
If the Eject operation is performed without the cassette carriage installed while repairing or making the mechanical phase alignment, the main cam gear will not engage with the carriage connection gear and will not rotate.
To perform the Eject operation with the cassette carriage not installed, it is necessary to rotate the carriage connection gear by hand in the direction of the arrow.

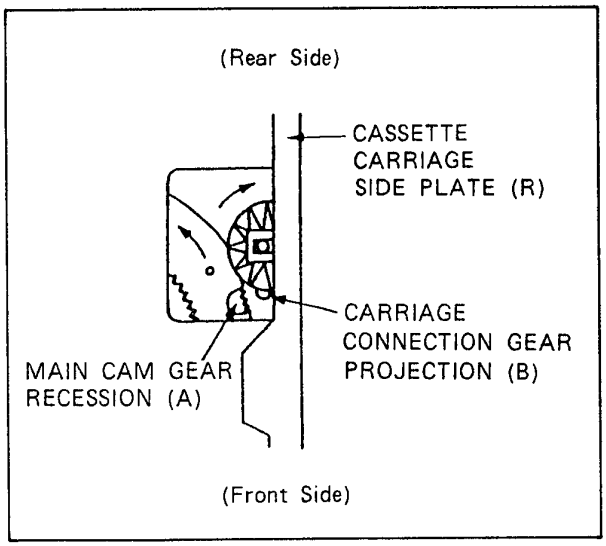

Fig. S6 Top View of Eject Operation

<F> TAKE-UP PHOTO SENSOR OPERATION

Note the following matters for Take-up Photo Sensor Operation.

1) While servicing of the K-Mechanism, the unit will not operate properly if a strong light (ex, Fluorescent light, Spot light) falls on the Take-up Photo Sensor.
   In this case, cover the Take-up Photo Sensor to prevent the light from falling on it.
2) While servicing of the K-Mechanism with "Power On" and without cassette tape inserted, the Unit will not operate properly.

<G> POWER TRANSISTOR SERVICING

When removing the connector of the Power Transistor, hold the Power Transistor by hand to prevent damage.

<H> CASSETTE TAPE REMOVAL

If the electrical circuit is defective and the action of unloading and front unloading do not work properly, it is possible to remove the cassette manually. There are 2 methods of removing the cassette.

(1) HAND OPERATION

1) Remove the bottom plate.
2) Turn the Worm Gear to "A" arrow mark direction manually as shown in Fig.S7, moving the Loading Post to the unloaded position.
3) Turn the Capstan clockwise to take up the tape.
4) Turn the Worm Gear again to eject the cassette.

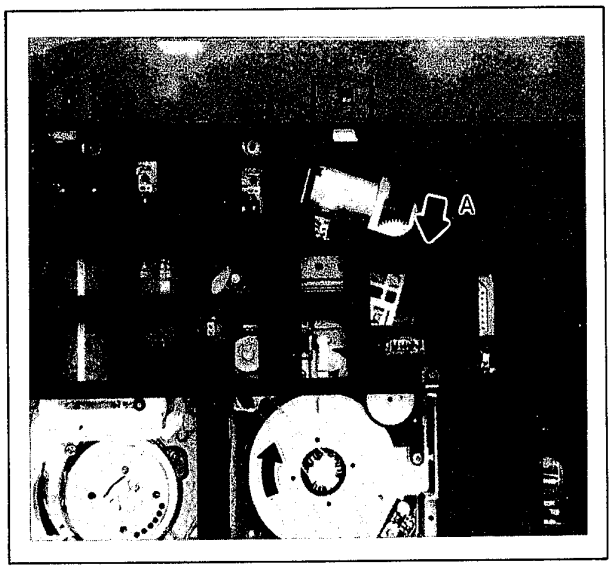

Fig. S7

(2) BATTERY OPERATION

1) Connect the battery(Manganes-Type R6(AA) 3pcs./+4.5V) to P1503 as shown in Fig.S8, S9.
2) After moving the Loading Post to the unloaded position, disconnect the battery to stop the motor.
3) Turn the Capstan to clockwise to take up the tape.
4) Reconnect the battery to eject the cassette.

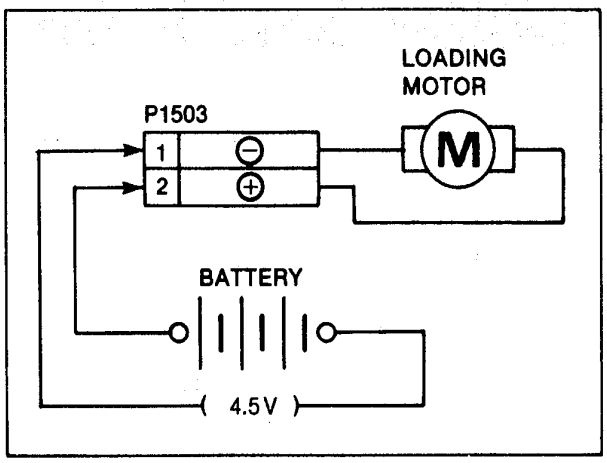

Fig. S8

If the cassette tape can not be removed by the above 2 methods, remove it by the following method

1) Remove the Top Panel
2) Remove the Front Panel Unit.
3) Lift up the Pinch Arm after removing spring.
4) Push the P5 Arm and remove the cassette tape from tape transportation(P1, P2, P3 and P5 Posts).
5) Turn the Capstan Motor to take up the tape.
6) Remove 1 screw from the Side Plate (R) Unit to disconnect the Rack Gear from the Carriage Connection Gear.
7) Take out the cassette tape from the Cassette Compartment.

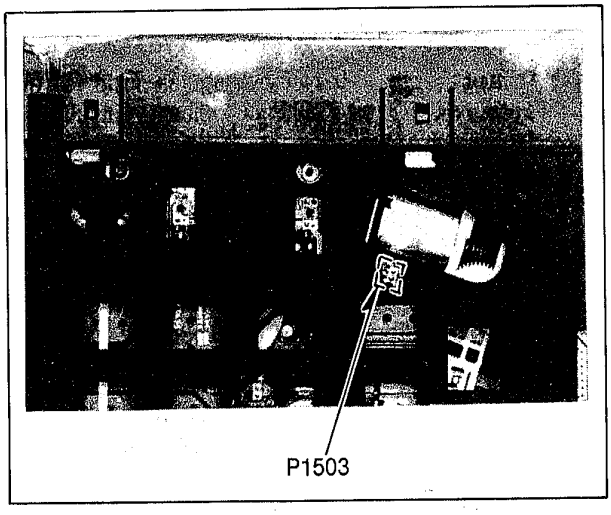

Fig. S9

<I> FLAT CARD CABLE INSTLLATION

When installing the Flat Card Cable on the connector, install the Flat Card Cable with the cable contacts facing the connector contacts.

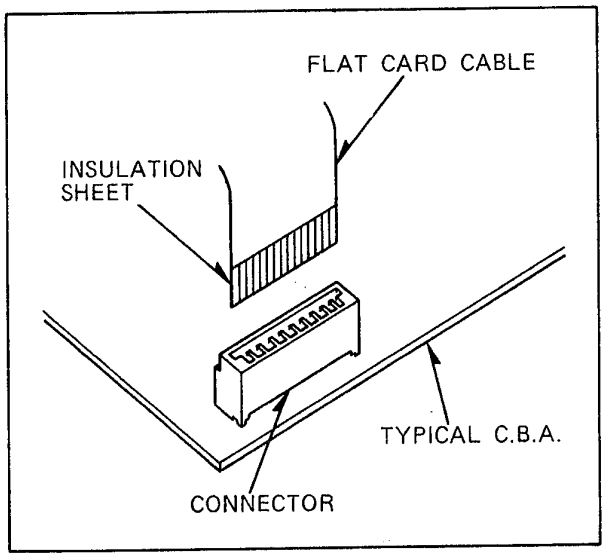

Fig. S10

<J> CHANNEL MEMORY IC INITIALIZATION

When replacing the channel memory IC7503(Part No. :M6M80011AP) its IC should be initialized.

Method:

1) Press the CH UP/DOWN button so that the channel indicator indicates "3"
2) Connect a jumper wire twice to Pin 54 and Pin 34 of IC7501.
3) Channel indication changes from "3" to "1"

Note:
1) It should be performed before tuning.
2) Do not turn off the power source during initialization or 1 second after.

1-2 SERIAL CLOCK TRANSMISSION ERROR DISPLAY

If the Serial Clock is not transmitted from IC6001 to IC7501, "E9" is displayed as shown in Fig. T1. This indication will be displayed the Operate button is either ON or OFF.

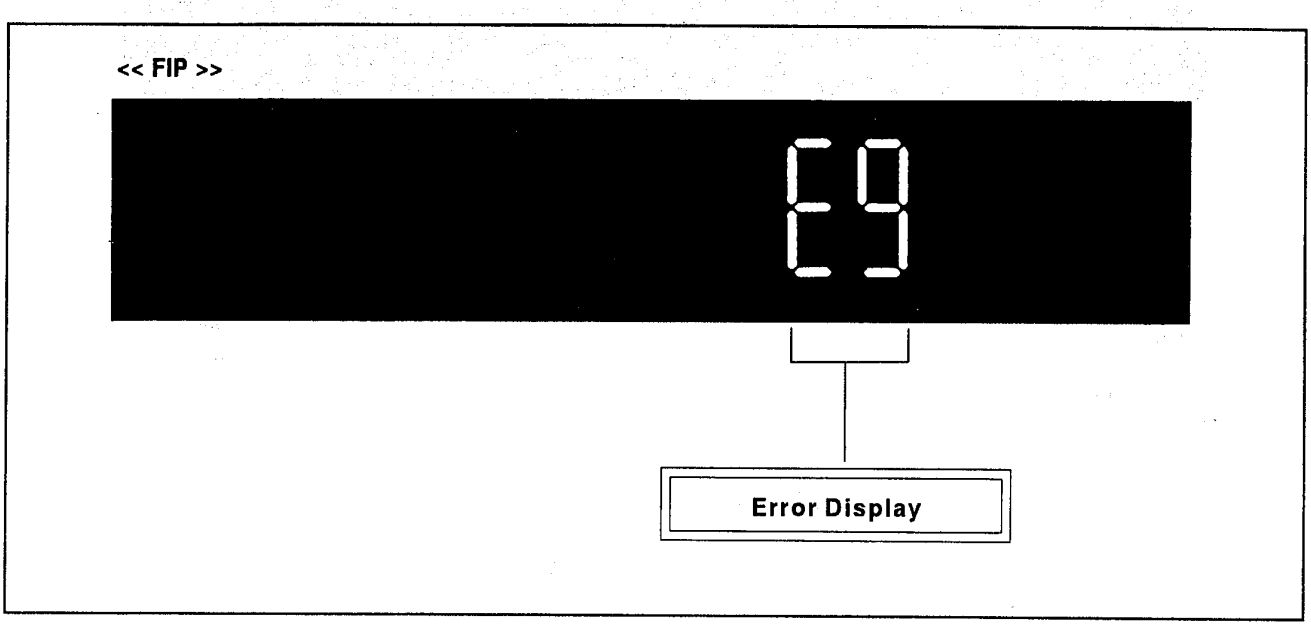

Fig. T1 Serial Clock Transmission Error Display

1-3. SERVICE INFORMATION DISPLAY

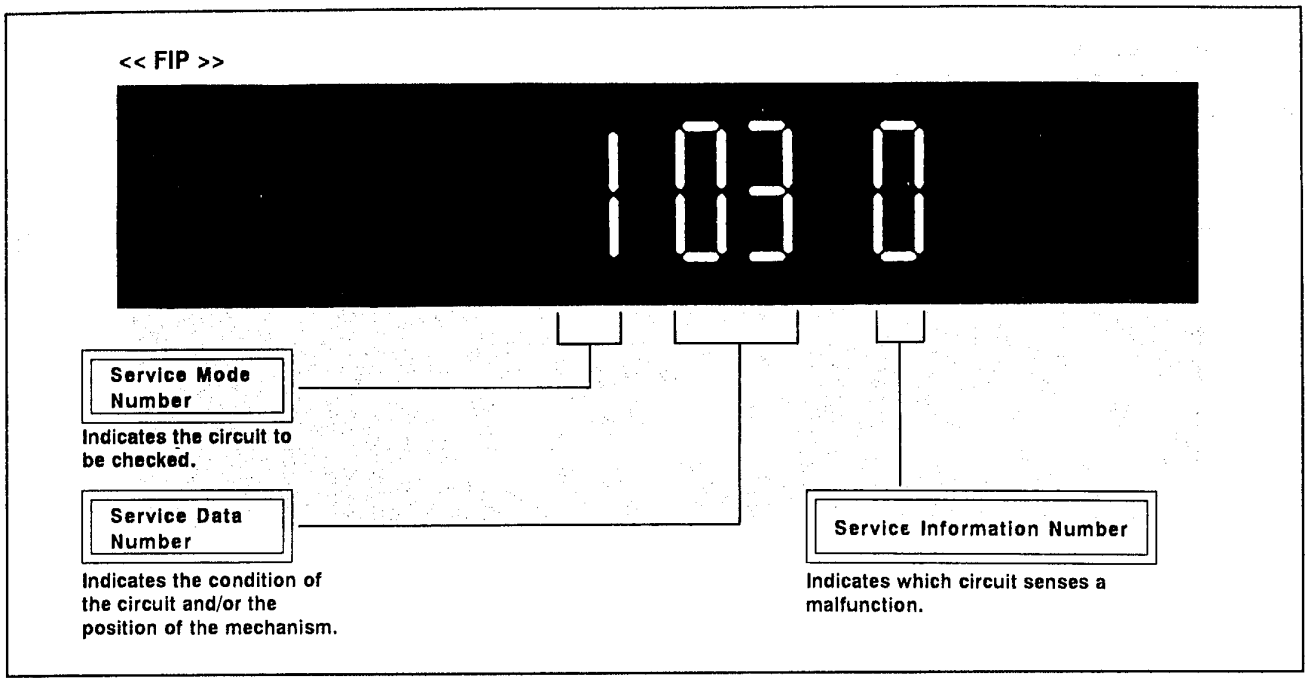

Fig. D1 Service Information Display

1-3-1. Purpose of Service Information Display

This information aids trouble shooting by indicating the source of the malfunction. The service mode number & service data number are used by the technician during repair while the service information can be used by the consumer to diagnose malfunctions allowing the technician to provide a more accurate repair cost estimate and reduce repair time.

1-3-2. Turning on Service Information Display

There are two ways to turn on the Service Information Display.

(1) Press the FF, REW and EJECT buttons simultaneously.
The Service Information will be displayed for 1 minute.

(2) Connecting a jumper wire between TLSERV and GND will display the service information indefinitely.

In the Service Information Display, there are four digits divided into 3 functions. The first digit indicates which of the 7 service modes that the unit is currently in.

MODE 1 :Checks tape protection circuit
MODE 2 :Checks tape transport mechanism
MODE 3 :Checks mode switching operation
MODE 4 :Checks control buttons
MODE 5 :Checks capstan motor
MODE 6 :Checks cylinder motor
MODE 7 :Checks loading/unloading operation

The second and third digits are service data which indicate the condition of the circuit or mechanism being checked.

The forth digit is the service information display. It is to be used by the consumer to help determine the source of a malfunction. The service information display operates independently of the service modes and stores the fault indication in memory for as long as AC power is supplied

1-3-3. Use of Service Modes

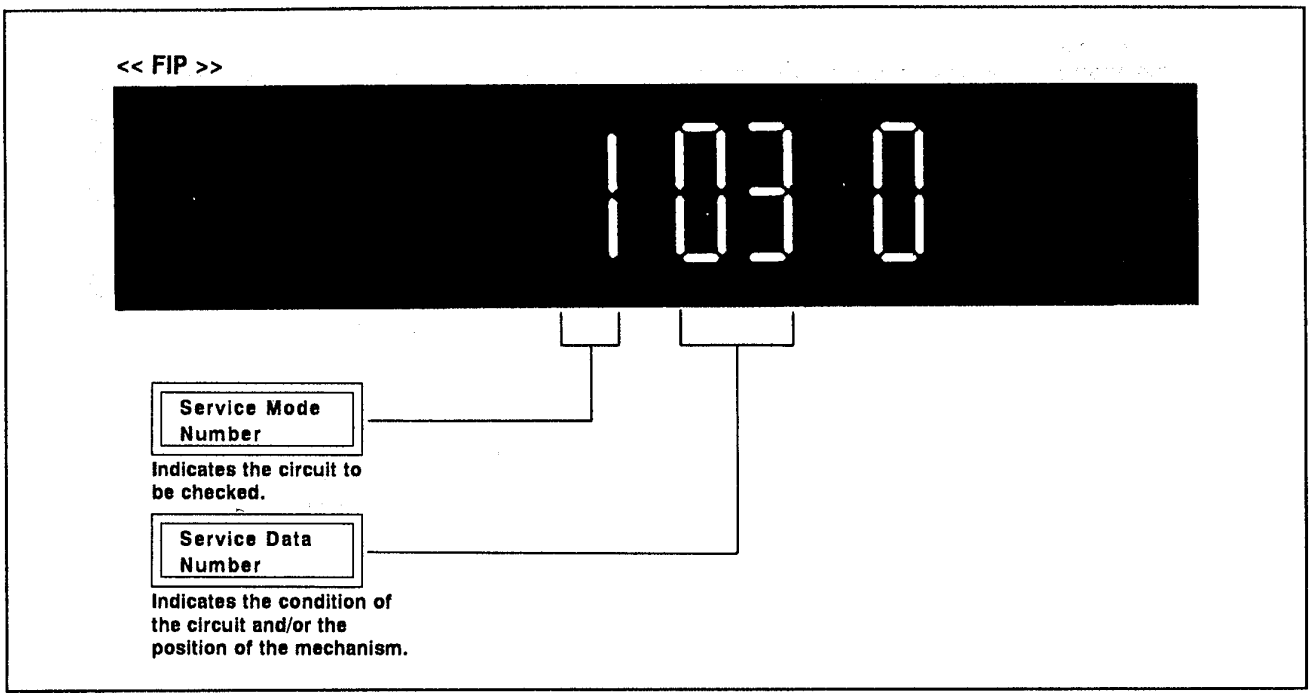

Fig.D2 Service Mode Number and Service Data Number on S.I.D.

(1) Turn on Service Information Display.

(2) To change Service Modes press the FF, REW and EJECT buttons simultaneously.

(3) Mode 1 :

Check that the Sensor LED, Supply & Take-up Sensor circuits check the circuits by blocking the light from the Sensor LED to either or both Supply & Take-up Sensors.
When the light is blocked to both sensors, " 00 " should be indicated on the service data number. When the light is blocked to the supply sensor, " 01 " should be indicated.

(4) Mode 2 :

Checks the mode switch circuit while indicating mechanism position.
Service Data Numbers indicate the position of the mode switch and there by the mechanism position.

(5) Mode 3 :

Checks that mode switch circuit operations have been completed.
Service Data Number should indicate " 00 " after each mechanism operation is completed.

(6) Mode 4 :

Checks the operation circuit. Indicates if IC6001 receives the operating commands from the mode buttons and/or remote controller.

(7) Mode 5 :

Checks the capstan motor circuit.
Indicates if the IC6001 has received the command to rotate the capstan motor.

(8) Mode 6 :

Check the cylinder motor circuit. IC6001 has received the command to rotate the cylindermotor.

(9) Mode 7 :

Checks the Loading/ Unloading Operation.
The Loading Motor rotates for loading operation when the " PLAY " button is pressed.
The Loading Motor rotates for unloading operation when the " STOP " button is pressed. This mode can be displayed indefinitely until the OPERATE button is pressed.

<NOTE>

Refer to Fig. D5 for details of Service Data Number.

1-3-4. Service Information Number

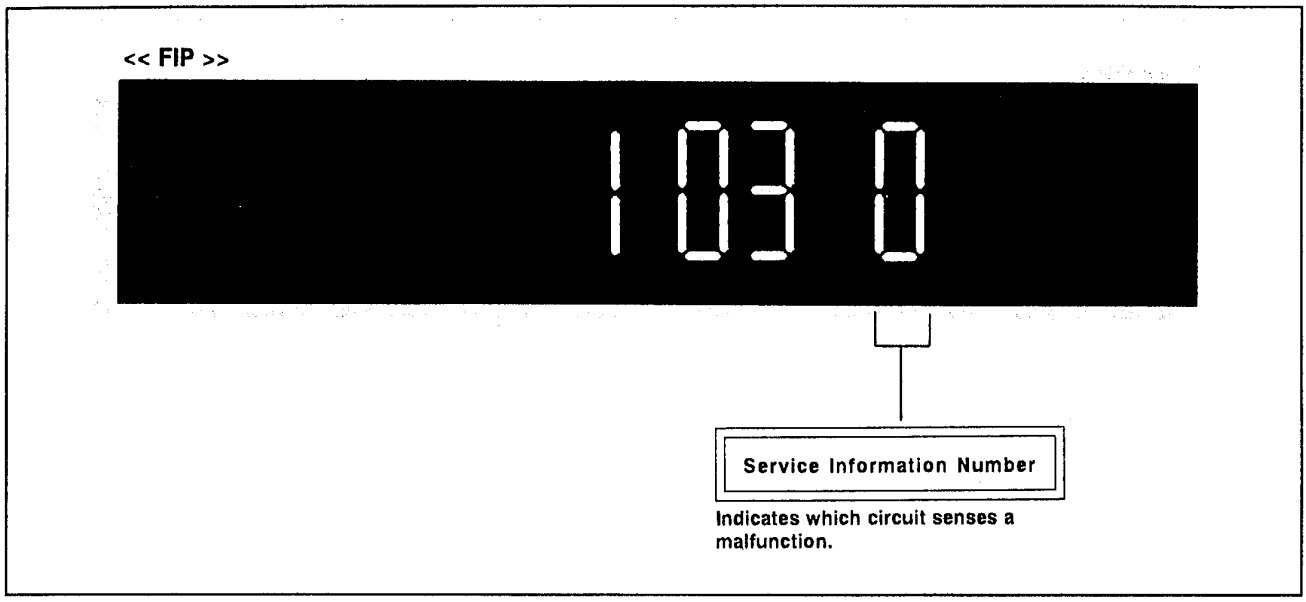

Fig. D3 Service Information Number on S. I. D.

Refer to Fig. D4 for details of Service Information Number.

Note:

The Service Information Number display is independent of the service mode display. The Service Information Number will be stored as long as AC power is supplied. If a second error occurs, only the most recent error will be displayed.

Service Information Number	Malfunction
0	Normal (No problem)
1	Cylinder stop
2	Tape reel stop
3	Stop at position other than 4 or 6
4	Stop during unloading
5	Faulty capstan rotation
6	Stop during Cassette-IN/Eject operation
7	D REC 12V error

Fig. D4 Detail Service Information Numbers

Service mode Number	Note for checking Service Data Numbers	Service Data Numbers	Indication	Remarks
1	———	00	No light detected at either sensor	Tape not required
		01	Tape Beginning. Light to Supply Photo Sensor is blocked.	
		02	Tape End. Light to Take-up Photo Sensor is blocked.	
		03	Light detected at both sensors.	
2	———	00	EJECT	Tape Required *1:STOP3; The Pinch Roller is on the capstan motor shaft. *2:STOP; The Pinch Roller is off the capstan motor shaft. Refer to Fig.D7 to Check mechanism Position and timing.
		01	Cassette-down	
		02	REV, REV SLOW	
		03	Loading/Unloading	
		04	PLAY/REC, STILL/PAUSE, CUE, FWD SLOW, STOP3 *1	
		05	STOP *2	
		06	FF/REW	
		07	Intermediate position	
3	Disregard service data displayed until mechanism operation is completed. Then the display should indicate "00".	00	Any display other than "00" indicates a fault in the mode switch circuit or system.	Tape Required.
4	Display only when the operating button is pressed.	Refer to Fig. D6.		Tape not required
5	Left digit only, disregard Right digit display.	8 1 Left Digit / Right Digit	8, 9, u, A, -, n, L, and no display indicate that the Capstan motor "PLAY" command received by IC6001.	Tape required. If a symbol other than those listed is displayed, a malfunction in that circuit is indicated.
	Right digit only, disregard left digit display.	8 7 Left Digit / Right Digit	1, 2, 3, 4, 5, 6 7, indicate that the Capstan motor "CUE, FF, Forward slow" commands received by IC6001.	
	Right digit only, disregard left digit display.	8 Left Digit / Right Digit	8, 9, u, A, -, n, L, and no display indicate that the Capstan motor "Reverse, Rew, Reverse Slow" commands received by IC6001.	
6	Left digit only, disregard Right digit display.	1 0 Left Digit / Right Digit	1, 3, 5, 7, 9, A, n and no display indicate that the cylinder motor "ON" command received by IC6001.	Tape required. If a symbol other than those listed is displayed, a malfunction in that circuit is indicated.

SERVICE DATA NUMBERS	MODE BUTTONS	SERVICE DATA NUMBERS	MODE BUTTONS
30	OPERATE	54	RESET
01	EJECT	5	ZERO STOP
-9	PAL/MESECAM	49.40	INDEX
—	CHECK/PROG.	A1.A2	TRACKING(+,-)/V-LOCK
34 or 35	∧ ∨ , + −	—	PROG.
—	NEXT	—	NEXT
—	SLEEP / SHIFT	00	STOP
A4	TIMER REC	03.02	FF, REW
08	REC	—	TV / VTR
—	CLOCK SET	—	DISPLAY
—	TUNER PRESET	00	PLAY
06	PAUSE / STILL		

Fig. D6 Service Data Display for Service mode 4

1-3-5. Timing Chart from Mode SW to System control IC6001

System control IC6001 senses the mechanism position through the Mode SW.
Fig. D7 shows the timing for Service Mode Number 2.

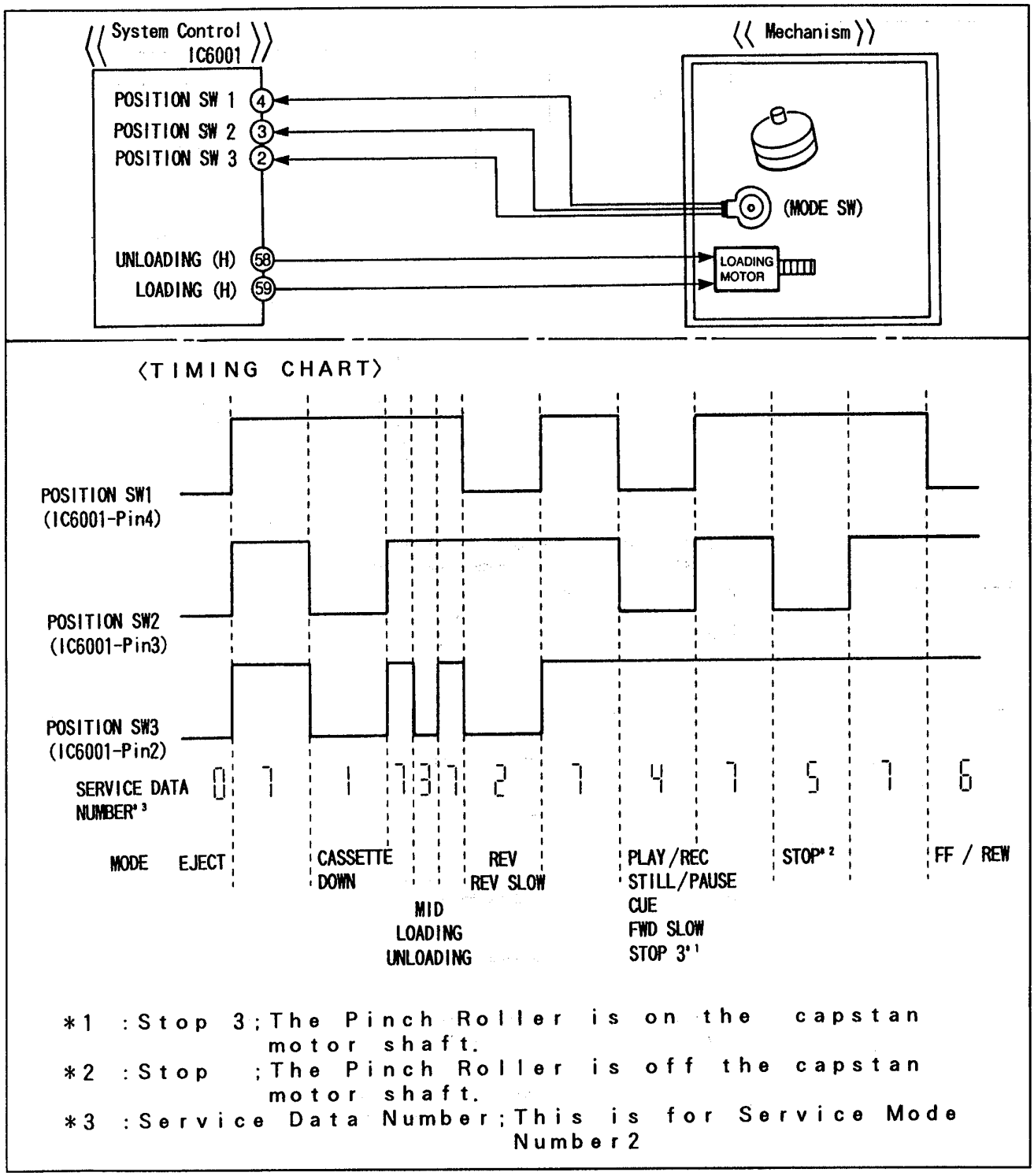

Fig. D7 Timing Chart of Mode SW

1-3-6. Input/Output Chart for IC6001

<table>
<tr><th>Pin Number</th><th>Input/Output</th><th>Port Name</th><th>Function</th></tr>
<tr><td>1</td><td>I</td><td>SAFETY TAB</td><td>When inserting the cassette tape with safety tab, this port is low. When there is no safety tab, this port is high to prevent recording.</td></tr>
<tr><td>2</td><td>I</td><td>POSITION SW 3</td><td rowspan="3">
<table>
<tr><th>P.SW 3</th><th>P.SW 2</th><th>P.SW 1</th><th>Position (Mode) Name</th></tr>
<tr><td>O</td><td>O</td><td>O</td><td>EJECT</td></tr>
<tr><td>O</td><td>O</td><td>I</td><td>CASSETTE DOWN</td></tr>
<tr><td>O</td><td>I</td><td>O</td><td>REV, REV SLOW</td></tr>
<tr><td>O</td><td>I</td><td>I</td><td>MID (LOADING / UNLOADING)</td></tr>
<tr><td>I</td><td>O</td><td>O</td><td>PLAY/REC, STILL/PAUSE, CUE, FWD SLOW STOP3 *1</td></tr>
<tr><td>I</td><td>O</td><td>I</td><td>STOP</td></tr>
<tr><td>I</td><td>I</td><td>O</td><td>FF/REW</td></tr>
<tr><td>I</td><td>I</td><td>I</td><td>INTERMEDIATE</td></tr>
</table>
(*1) The Pinch Roller is on the capstan motor shaft.</td></tr>
<tr><td>3</td><td>I</td><td>POSITION SW 2</td></tr>
<tr><td>4</td><td>I</td><td>POSITION SW 1</td></tr>
<tr><td>5</td><td>I</td><td>SUPPLY REEL PULSE</td><td>Supply Reel Pulse Input
(For detecting tape remaining)</td></tr>
<tr><td>6</td><td>I</td><td>NORMAL/SERVICE/ TEST</td><td>Service Mode Setting
Normal Mode: High
Service Mode: Middle
Test Mode: Low</td></tr>
<tr><td>7</td><td>I</td><td>DEW</td><td>When Dew is detected, this port is middle.
Normally, this port is low.</td></tr>
<tr><td>8</td><td>I</td><td>TEST</td><td>Not used (Low setting)</td></tr>
<tr><td>9</td><td>I</td><td>ENVELOPE SELECT</td><td>The playback envelope video signal level is detected at this input to select the video head in the special playback modes.</td></tr>
<tr><td>10</td><td>O</td><td>ROTARY SW</td><td>This signal is supplied to the chrominance circuit to perform the phase rotation.</td></tr>
<tr><td>12</td><td>O</td><td>HEAD AMP SWITCH</td><td>This signal is supplied to the head amp circuit to switch the video head, SP or LP.</td></tr>
<tr><td>14</td><td>O</td><td>ARTIFICIAL V /H/N</td><td>Artificial Vertical Sync Signal is supplied to video circuit to stabilize the picture in the special playback modes.</td></tr>
<tr><td>17</td><td>I</td><td>TAKE-UP PHOTO</td><td>Take-up Side Photo Sensor Input
(For detecting tape beginning)</td></tr>
<tr><td>18</td><td>I</td><td>SUPPLY PHOTO</td><td>Supply Side Photo Sensor Input (For detecting tape end.)</td></tr>
</table>

Pin Number	Input/Output	Port Name	Function
19	I	TAKE-UP REEL	Take-up Reel Pulse Input (For detecting tape remaining and reel (Cap.) lock.
20	O	SP/LP	Tape Speed Output SP: Low LP: High
47	O	VTR (H)	VTR / TV Switch Output VTR: High TV: Low
48	O	SP (H)	Tape Mode Output SP: High LP: Low
54	O	SENSOR LED ON (L)	When turning on the Sensor LED, this port is low. 1) STOP Mode: No lit. 2) FF, REW, CUE, REV Modes: DC is lit. 3) EJECT Mode: Pulse blinking. (Cycle: 320[msec])
55	O	VOLTAGE CHANGE (H)	When increasing the drive torque of loading motor to perform the FF/REW mode, this port is low.
58	O	UNLOADING (H)	When unloading, this port is high.
59	O	LOADING (H)	When loading, this port is high.
63	O	SERIAL CLOCK	Serial Clock Output
64	I/O	SERIAL DATA	Serial Data In/Out
66	O	DELAYED REC (H)	When the video goes to the recording mode after a delay from the video recording command, this port is high.
67	O	DELAYED AUDIO REC (H)	When the audio goes to the recording mode after a delay from the audio recording command, this port is high.
68	O	FULL ERASE (H)	When the video goes to the recording mode, this port is high.
69	O	REC (H)	When the video goes to the recording mode, this port is high.
70	O	NTSC (L)	System Output NTSC: Low PAL: High
71	O	AUDIO MUTE (H)	When the audio goes to the mute mode, this is high.
72	O	CAPSTAN REVERSE (H)	When the capstan motor rotates in reverse, this is high.
73	O	AUDIO EE (H)	When the audio goes to the EE mode, this is high.

Pin Number	Input/Output	Port Name	Function
75	O	CURRENT EMPHASIS (H)	When the servo goes to the edit mode, this is high.
76	O	FF/REW (L)	When the servo goes to the FF/REW mode, this is low.
78	O	VIDEO EE (L)	When the video goes to the EE mode, this is low.
79	O	TRICK (L)	When the video goes to the special playback (CUE, REV, SLOW, STILL) mode, this is low.
80	O	POWER OFF (H)	Power ON/OFF Control is low when the power switch is turned on.
84	I	RESET (L)	When reseting the IC6001, this port is low.

Connections

This tells you how to connect with an aerial, TV, etc.

Basic Connections

The following connections are required to record and play back the VTR through TV set:

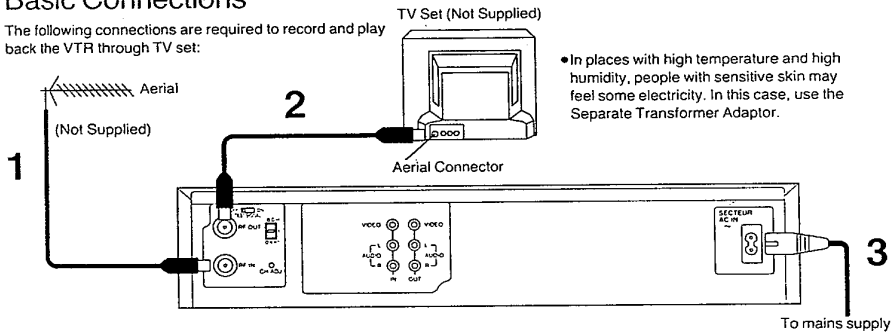

•In places with high temperature and high humidity, people with sensitive skin may feel some electricity. In this case, use the Separate Transformer Adaptor.

Connection to a TV Set with the Audio/Video Input Sockets

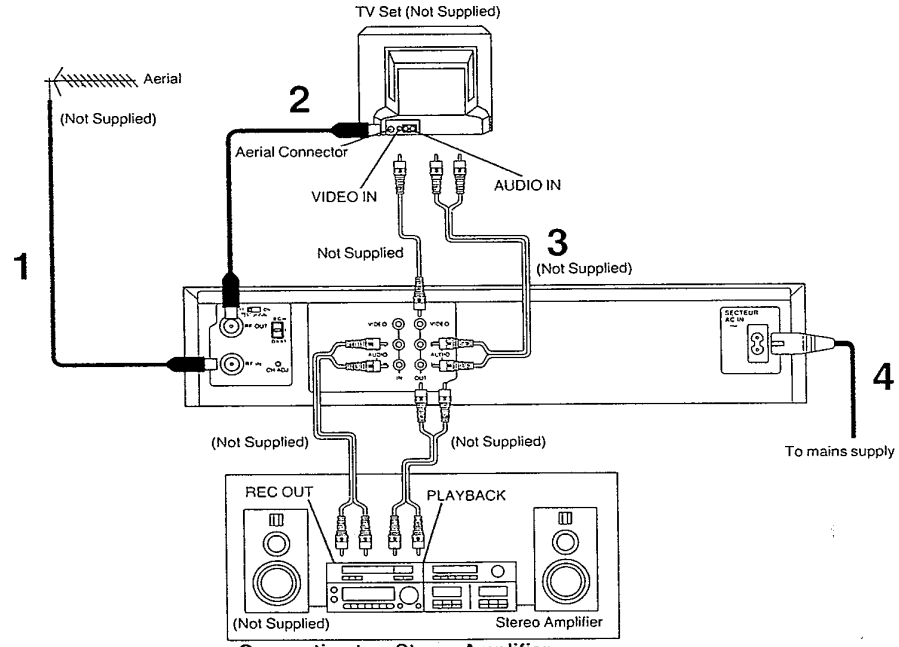

•Connection to a Stereo Amplifier

Tuning the TV to your VTR

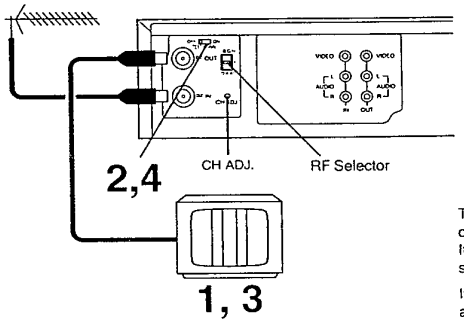

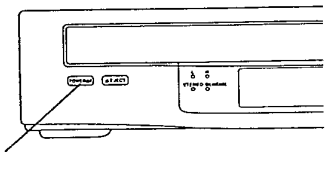

The VTR supplies a signal to the TV set via the RF coaxial cable on channel E38, C25 or US between 36 and 37. It is possible to view the video picture on your TV in the same way that you watch TV broadcasts.

If you have connected the VTR to the TV through the video and audio sockets then you do not need to follow the procedure mentioned below.

Operations

1	POWER⏻/I	Turn on the TV and VTR.
2	OFF ON TEST SIGNAL	To generate a test pattern, set **TEST SIGNAL** to ON.
3		Set the TV to an unused position which you wish to use for your video playback.
4	OFF ON TEST SIGNAL	Set **TEST SIGNAL** to OFF.

Note:
The test signal is transmitted on video channel C25 (CHINA), E38 (CCIR) or US between 36 and 37 (NTSC). If you are encountering interference from a TV broadcast on this video channel, you may readjust to another free channel (C24~27, E32~40, US29~39) by using the **CH ADJ.** screw which is located on the rear of the VTR. Please note that if the **CH ADJ.** screw is used then you will have to retune your TV to the test signal as in items 2 to 4 above.

RF Selector
Use the RF Selector to select the colour TV system used by the TV set to be connected.
B.G.H: PAL B.G.H/SECAM B.G
I: PAL I
D.K.K1: PAL D/SECAM D.K.K1
•When **SYSTEM** on the front panel is at the NTSC 3.58 position, the NTSC 3.58 system will be selected regardless of the position of the RF selector.

Setting the Clock of the VTR

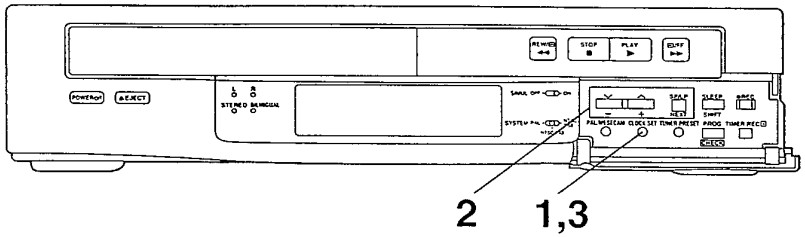

The built-in clock is used to activate the timer for automatic recording and must be set to the correct time.

The built-in digital clock employs the 24-hour system.

Preparation
Turn on the VTR.

For Example:
Date; 16th, October, 1999
Time; 20:15

Operations	Display Symbols	
1 CLOCK SET		Keep **CLOCK SET** pressed for more than 2 seconds.
2 Set each item by pressing + or – and **NEXT**.		
– +	99	Set **Year** "99".
	10	Set **Month** "10".
↓	16	Set **Date** "16".
	20:00	Set **Hour** "20".
NEXT	20:15	Set **Minute** "15". •There is no need to press **NEXT**.
3 CLOCK SET	20:15	Press **CLOCK SET**. •The clock will start.

Note:
The clock operates for at least 60 minutes by its backup system in the event of power failure.

Time Reset Function

If the clock is less than two minutes slow or fast, it can easily be reset to the proper time.

For example:
Resetting the clock to 12:00.00

1 Keep **CLOCK SET** pressed at any time between 11:58.00 and 12:01.59 for more than 2 seconds.

2 Press **CLOCK SET** again as soon as you hear the 12:00.00 time signal.

Storing TV Broadcasts into your VTR

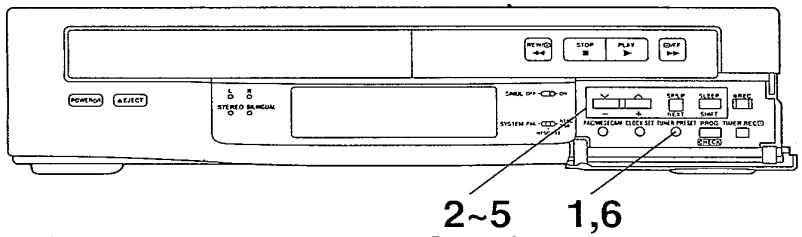

Introduction

The VTR is fitted with its own tuner (just like a normal TV set) and can be pre-set to receive up to 42 TV broadcast stations.

Preparation

- Confirm that the TV is on and the VTR viewing channel is selected.
- Turn on the VTR and Select the programme position except A1.

Operations	Display Symbols	
1 TUNER PRESET		Keep **TUNER PRESET** pressed for more than 2 seconds.
2 – + → NEXT		Select the programme position, then press **NEXT**.
3 +		Select TV band "I", "III" or "U".
4 SHIFT ↓ NEXT		Press **SHIFT** to select the broadcasting system. •1 (PAL B.G.H.D/SECAM B.G.D.K.K1): For receiving PAL B.G.H.D or SECAM B.G.D.K.K1 system broadcasts. Press **PAL/MESECAM** to select the broadcasting system for the TV station to be tuned. PAL: MESECAM indicator should not be lit. SECAM: MESECAM indicator should be lit. •2 (PAL I): For receiving PAL I system broadcasts. •3 (NTSC): For receiving NTSC system broadcasts. Then press **NEXT**.
5 – + SHIFT		Search for the required TV station by pressing and holding + or –. Release once the station has been found. •Search speed changes quickly by pressing **SHIFT** simultaneously with + or –. •Press **NEXT** and repeat steps 2–5 for each programme position you want to tune to a station.
6 TUNER PRESET		Press **TUNER PRESET** twice.

Fine Tuning Procedure

1 Keep **TUNER PRESET** pressed for more than 2 seconds, and then press again.

2 Press **NEXT**.

3 Press + or – to obtain the best tuning condition.
- "A" Indicator disappears.
- To return the tuning to its former state, press **SHIFT**.

4 Press **TUNER PRESET**.

Blanking of Unoccupied Programme Positions

1 Keep **TUNER PRESET** pressed for more than 2 seconds.

2 Select a programme position which you do not want to tune to a TV station, by using + or –.

3 Press **SHIFT**. ("– –" is displayed.)
- Repeat steps 2 and 3 for another unoccupied programme positions to skip during the selection of the programme positions.
- To cancel the blanking of a programme position, select that programme position on the VTR and then press **SHIFT**.

4 Press **TUNER PRESET** twice.

Channel Plan

	SYSTEM	VHF		UHF
		I	III	U
1	CCIR STD (B.G.H)	2–4 S1–S3*	5–12 M1–U10*	21–69
1	CHINA (D)	1–5	6–12	13–57
1	EAST EU (D.K.K1)	1–5	6–12	21–69
2	HONG KONG, UK (I)	——		21–69
3	USA (NTSC)	2–6 A-5–A-3*	7–13 A-2–W*	14–79
3	JAPAN (NTSC)	1–3	4–12	13–62

*CATV: VHF 44–300 MHz

Setting the Remote Controller for Operation of your TV

You can operate some manufacturer of TVs (See Table below) using the supplied Remote Controller after this setting up.

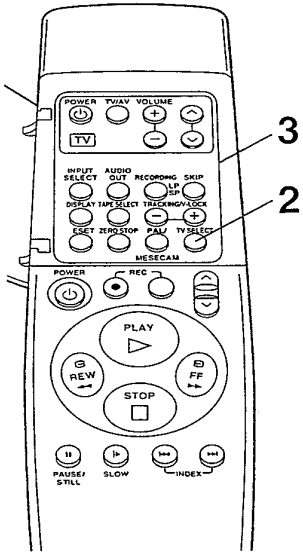

Preparation

- Turn on the TV.
- Install the batteries in the remote controller. See page 11.

Operations

1 Open the door of the remote controller.

2 Keep **TV SELECT** pressed.

TV SELECT

3 Press corresponding operation button to your TV manufacturer while keeping **TV SELECT** pressed.

- If setting is correct, TV will be turned off automatically.

4 Close the door of the remote controller.

TV Manufacturer	Operation Button
Panasonic/National	TV SELECT + POWER
	TV SELECT + TV/AV
	TV SELECT + VOLUME ⊕
	TV SELECT + ⌃
SONY	TV SELECT + ⊖
TOSHIBA	TV SELECT + ⌄
JVC	TV SELECT + INPUT SELECT
HITACHI	TV SELECT + RECORDING LP SP
MITSUBISHI	TV SELECT + SKIP
	TV SELECT + DISPLAY
SHARP	TV SELECT + RESET
PHILIPS	TV SELECT + ZERO STOP

When the TV manufacturer is Panasonic/National or MITSUBISHI:
When the TV's power is turned off in step **3** above, turn it back on and adjust the TV's volume using this remote controller. The volume can be adjusted if the operation button matches the manufacturer of TV.
If it is not possible to adjust the TV's volume, try pressing the other operation button to match the manufacturer of TV again until the volume can be adjusted.

Note:
Some TV models cannot be operated using this remote controller.

Power Source for the Remote Controller

The remote controller is powered by 2 "AA", "UM3" or "R6" size batteries. The life of the batteries is about one year, although this depends on the frequency of use.

Precautions for Battery Replacement

- Load the new batteries with their polarity (⊕ and ⊖) aligned correctly.
- Do not apply heat to the batteries, or an internal short-circuit may occur.
- If you do not intend to use the remote controller for a long period of time, remove the batteries and store them in a cool and dry place.
- Remove spent batteries immediately and dispose of them.
- Do not use an old and a new battery together, and never use an alkaline battery with a manganese battery.

Installing the Batteries

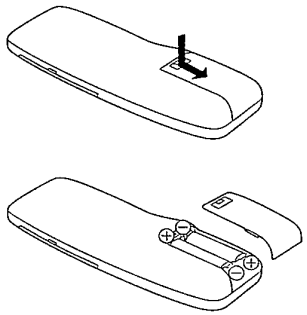

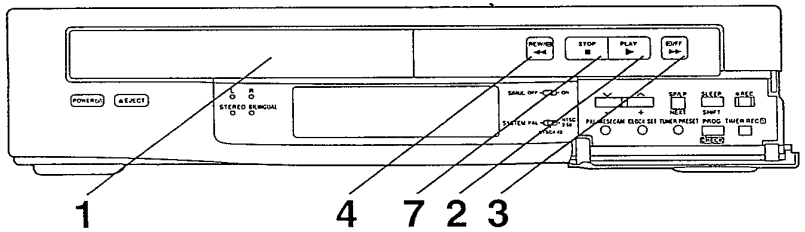

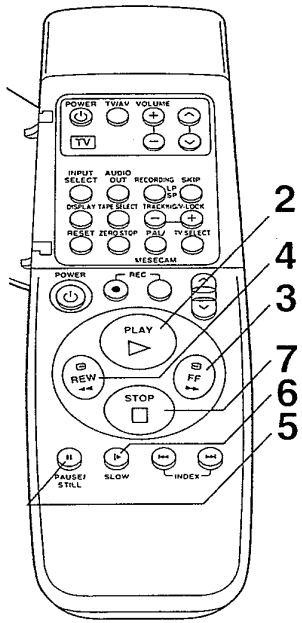

Operations	Display Symbols	
1		Insert a recorded cassette tape.
2 PLAY		Start viewing the picture.
3 FF		Search forward by tapping **FF**. •To change back to normal playback, press **PLAY**.
4 REW		Search backward by tapping **REW**. •To change back to normal playback, press **PLAY**.
5 PAUSE/STILL		View a still picture. •To continue the normal playback, press **PLAY** or **PAUSE/STILL**.
6 SLOW		View the slow motion picture. •To continue the normal playback, press **PLAY**.
7 STOP		Stop viewing the picture.

Other Playback Functions

To obtain High Speed Picture During Fast Forward or Rewind

Keep **FF** pressed during fast forward.
Keep **REW** pressed during rewind.

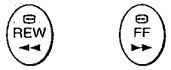

To skip Scene

Press **SKIP** during playback.

- The following 30 seconds will be skipped.
- Each press gives a 30 seconds time span up to 4 minutes.

To return to a Specified Scene

1 Press **RESET** to set the counter to 0:00.00.
2 After playback, press **ZERO STOP** in the stop mode.

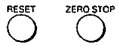

- The tape will be rewound or fast forwarded to 0:00.00.

To find the Beginning of Each Recording

For example:
Searching for the 2nd recorded segment in the forward direction.

Press **INDEX ▶▶I** twice.

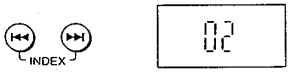

- After finding the specific recorded segment, playback starts automatically.
- For the reverse direction, press **INDEX I◀◀**.
- Up to 20 index signals can be searched for in both directions.
- The figure on the display is decremented by 1 each time an index signal is located.

Recording Index Signals
Index signals are recorded in following cases.
- When a recording is started by pressing **REC**
- When **REC** is pressed during recording
- When timer recording is activated

Note:
- During Playback, set **PAL/MESECAM**.
  PAL: : When playing back a tape recorded in the PAL system
  MESECAM: When playing back a tape recorded in the MESECAM system
  MESECAM Indicator lights up.
- Audio reproduction of linear (conventionally recorded) tapes will be monaural when played back on the FM Hi-Fi video recorders.
- Cue, review or slow playback will be automatically released after 10 minutes, and still playback after 5 minutes.
- The INDEX search function can only work correctly, if the index signals are spaced at least 3 minutes apart in the SP mode and 5 minutes apart in the LP mode.

Manual Recording

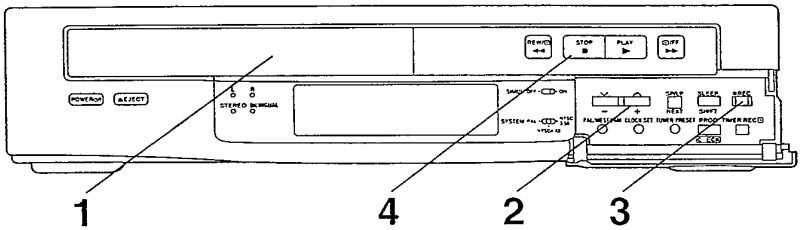

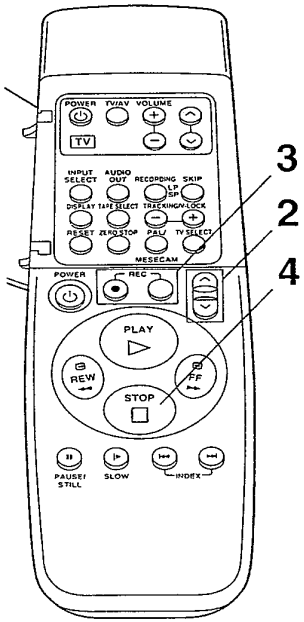

Operations	Display Symbols	
1		Insert a cassette tape. •If it has already been inserted, press **POWER** to turn the VTR on.
2		Select TV station.
3	REC	Start recording.
4	STOP	Stop recording.

To select the Desired Tape Speed

1 Press **RECORDING SP/LP** to display the tape speed indicator.

2 Keep **RECORDING SP/LP** pressed for more than 2 seconds while the tape speed indicator is displayed, to change the tape speed.

RECORDING LP SP

To interrupt Recording

Press **PAUSE/STILL** during recording.
Press again to continue recording.

PAUSE/ STILL

To record One TV Programme while Viewing Another Programme

1 Refer to the manual recording operations steps **1** to **3**.

2 Select the TV programme on your TV set you wish to view at the present time.

To display the Approximate Remaining Tape Time

1 Press **TAPE SELECT** to select the corresponding cassette tape length.

TV SELECT

E195: For E30, -60, -80, -120, -180 and -195 tapes
E240: For E240 tape
E260: For E260 tape

2 Press **DISPLAY**.

DISPLAY

→Clock→Counter→**Remaining Tape Time**

Recording of Stereo and Bilingual Programmes

1 Recordings are automatically made in the stereo or bilingual mode. This prevents errors in the selection of the dubbed or the original language.

2 During playback press **AUDIO OUT** to select the desired language. See page 22.

AUDIO OUT

Notes:

- Set **SYSTEM** according to the colour TV system.
  NTSC 3.58: When receiving NTSC 3.58 signals.
  NTSC 4.43: When receiving NTSC 4.43 signals.
  PAL: When receiving PAL or SECAM signals.
- When a video cassette with a broken off tab is inserted, the "" indication will flash to indicate that recording is not possible.
- The recording pause mode will be automatically released after 5 minutes, and be back to the stop mode.

Timer Recording

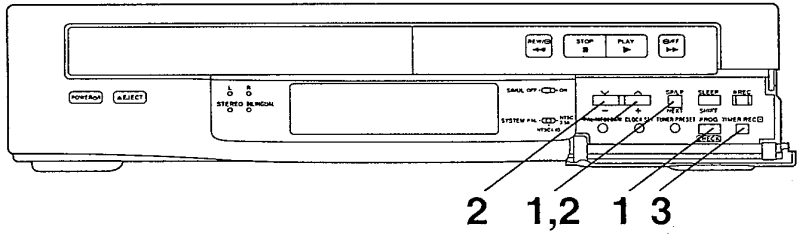

Up to 8 timer programmes can be recorded up to one month in advance by setting the timer.

Preparation
Insert a cassette tape with an intact erasure prevention tab.

For Example:
Timer Programme number; 1
Programme position (channel); 2
Date; 27th, October
Starting time; 20:02
Ending time; 21:30
(Present date; 16th October)

Operations	Display Symbols	
1 PROG/CHECK → NEXT	P1	Select **Timer Programme number** "1", and then press **NEXT**. P1 --------: When nothing is programmed P1 : When something has already been programmed
2 Set each items by pressing + or – and **NEXT**.		
– +	2	Set **Programme position** (channel) "2".
	27	Set **Date** "27".
↓	ON 20:15	Set **Starting time** (hour) "20".
	ON 20:02	Set **Starting time** (minute) "02".
NEXT	OFF 21:30	Set **Ending time** (hour) "21".
	OFF 21:30	Set **Ending time** (minute) "30". •There is no need to press **NEXT**.
3 TIMER REC		To activate timer recording, press **TIMER REC**.

Timer Recording from External Signal Source
If Timer Recording is performed by a unit connected to the Audio/Video input sockets, select the A1 indicator for the programme position.

Selecting the Desired Tape Speed
After step **2**, press **NEXT** and select SP or LP by pressing + or –.

Setting other Programmes in Succession
Repeat steps **1** and **2**.

Checking a Timer Programme
Select the timer programme number to be checked by **PROG/CHECK/** while the timer recording function is on.

Cancelling a Timer Programme
1 Release from the standby mode by pressing **TIMER REC**.
2 Select the timer programme number to be canceled by pressing **PROG/CHECK**.
3 Press + and – simultaneously for more than 3 seconds.

Note:
If a timer recording is not performed to the end (due to insufficient tape or cancellation by the user), the programmed timer recording data will be cancelled from the memory by 4 a.m. two days later.
However, if the Timer Record Function is activated at that time, the programmed timer recording data will be cancelled at 4 a.m. the next day.

Other Functions

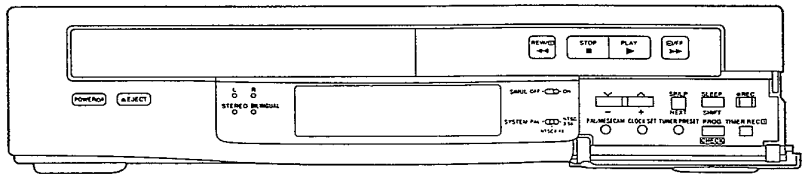

Automatic VTR off time setting

Press **SLEEP** for the desired time.

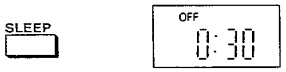

- Each press gives a 30 minutes time span up to 9 hours.
- To cancel the setting time, press **SLEEP** repeatedly to set 0:00.

NTSC Playback

Tapes recorded in the NTSC system can be played back with this VTR via a PAL system TV set.

- Set **SYSTEM** according to the colour TV system of the TV set.

NTSC 3.58: Via a 3.58 system TV set.
NTSC 4.43: Via a 4.43 system TV set.
PAL: Via PAL system TV set.

Other Automatic Functions

Automatic Playback

When a cassette without an erasure prevention tab is inserted, the VTR starts playback automatically.

VTR-off Playback

When the VTR is off, an inserted cassette can be played back by pressing **PLAY**.

Automatic Rewinding

When the tape reaches its end during recording (except for timer recording) or playback, it will automatically be rewound to the beginning.

Automatic Switching Off and Ejection

When the VTR is switched off, an inserted cassette can be ejected simply by pressing **EJECT**. The VTR will eject the cassette and automatically turn itself off again.

Recording of Simulcast Sound

Set **SIMUL** to ON.

While this switch is in the "ON" position, the sound portion of the TV broadcast signal will be recorded only on the "normal" sound track. And the stereo sound signal received via the FM tuner will be recorded on the Hi-Fi sound tracks.

Editing

Assembly Editing

This function can be used to make up an edited tape from other recordings or video sources.

This enables you to record a new segment immediately after a previously recorded segment.

Preparation

- Connect a movie camera or another VTR to this VTR as shown.
- Insert a recorded cassette tape with an intact erasure prevention tab.
- Select the video source required by pressing **INPUT SELECT** to set A1.
- Set **SYSTEM** according to the colour TV system of the video source.

NTSC 3.58: When receiving NTSC 3.58 signals.
NTSC 4.43: When receiving NTSC 4.43 signals.
PAL: When receiving PAL or SECAM signals.

Set **PAL/MESECAM** according to the colour TV system of the video source.

PAL: When receiving PAL signals
MESECAM: When receiving SECAM/MESECAM signals
The MESECAM indicator lights up.

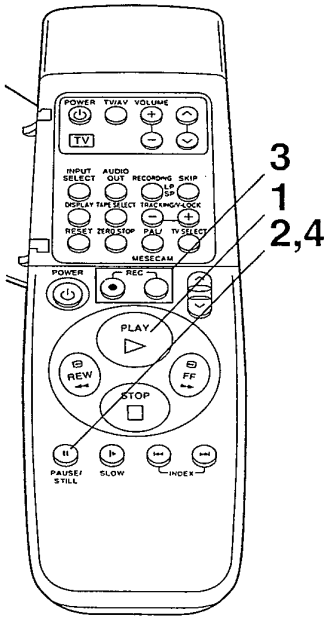

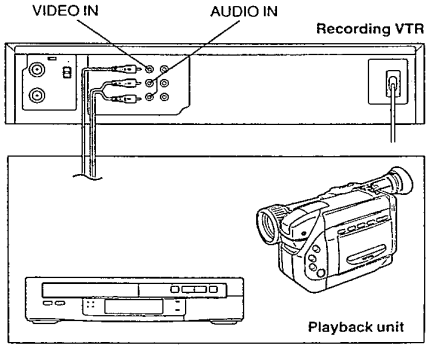

Operations

1 Search for the end of the previous recording.

2 Press **PAUSE/STILL**.

3 Press **REC** to switch the VTR from the pause mode to the recording standby mode.

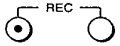

4 Start the new recording by pressing **PAUSE/STILL** again.

Note:
The new sound will be recorded on both the normal and Hi-Fi sound tracks, only monaural sound recording is possible on the normal sound tracks.

Controls and Connection Sockets

This gives a detailed explanation of the function of each button, switch and connection socket.

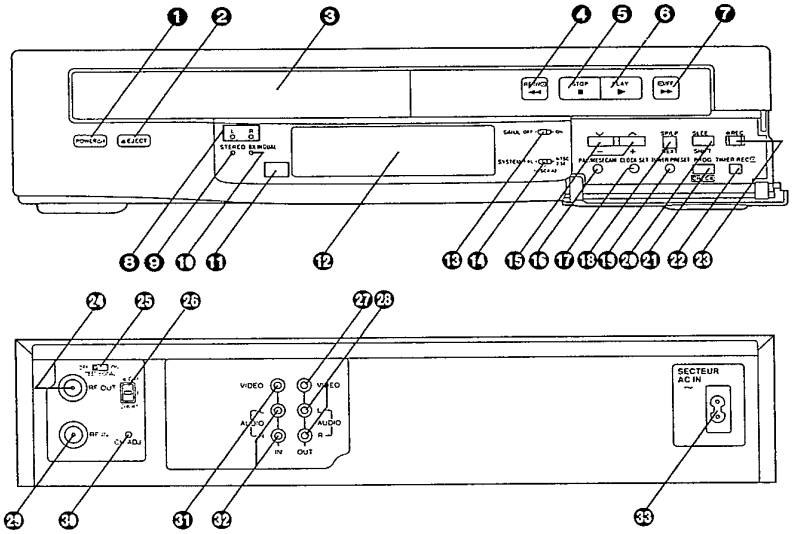

❶ **POWER ⏻/I**
Press to switch the unit from on to standby mode or vice versa. In standby mode, the unit is still connected to the mains.

❷ **EJECT**
To eject a video cassette.

❸ **Cassette Compartment**
Insert a video cassette here.

❹ **REW (REWIND)**
In the stop mode: To rewind the tape.
In the playback mode: To search backward.
In the rewind mode: To obtain high speed picture.
"◁◁" is lit.

❺ **STOP**
To stop any playback or recording.

❻ **PLAY**
To start playback. "▷" is lit.

❼ **FF (FAST FORWARD)**
In the stop mode: To fast forward the tape.
In the playback mode: To search forward.
In the fast forward mode: To obtain high speed picture.
"▷▷" is lit.

❽ **Audio Output Mode Indicators**
The Left (L) and Right (R) Indicators show which sound mode is selected in the following way.

Stereo: Both the Left (L) and Right (R) Indicators are lit.
Left: The Left (L) Indicator is lit.
Right: The Right (R) Indicator is lit.
Normal: Both the Left (L) and Right (R) Indicators are not lit.

❾ **STEREO Indicator**
When a stereo programme is received, this indicator lights up.

❿ **BILINGUAL Indicator**
When a bilingual programme is received, this indicator lights up.

⓫ **Infra-red Remote Control Receiver Window**

⓬ **Display**

⓭ **SIMUL**
While this switch is in the "ON" position, the sound portion of the TV broadcast signal will be recorded only on the "normal" sound track. And the stereo sound signal received via the FM tuner will be recorded on the Hi-Fi sound tracks.

⓮ **SYSTEM**
Set according to the colour TV system.
NTSC 3.58: When receiving NTSC 3.58 signals.
NTSC 4.43: When receiving NTSC 4.43 signals.
PAL: When receiving a PAL or SECAM signals.

⓯ **∨ ∧/– +**
To select the required programme position (TV station).
To set the clock and timer recording.

⓰ **PAL/MESECAM**
Set according to the colour TV system used during recording and playback.
When the MESECAM Indicator is lit, the MESECAM system is selected.

⓱ **CLOCK SET**
To set the time.

⓲ **SP/LP/NEXT**
To select the tape speed required for recording.
SP gives the best picture quality.
LP gives the longest recording time.
To proceed to the next item during setting procedure.

⓳ **TUNER PRESET**
To initiate TV station settings for the tuner.

⓴ **SLEEP/SHIFT**
To set the time to turn off the VTR automatically.
To blank unoccupied programme position.

㉑ **PROG/CHECK**
To select a timer programme number.
"P1, P2, P3...or P8" is lit.
To display details of preset timer recording while the timer recording function is on.

㉒ **TIMER REC**
To turn the timer recording function on and off.
◷ is lit or not lit.
Once operating timer recording function, the normal VTR operation is not possible unless this button is set to off.

㉓ **REC**
To start a recording.

㉔ **RF OUT**
To connect to the aerial terminal on a TV set.

㉕ **TEST SIGNAL**
The test signal is transmitted on channel E38 (C25, US between 36 and 37, J between 35 and 36).

㉖ **RF Selector**
To select the colour TV system used by the TV set to be connected.
B.G.H: PAL B.G.H/SECAM B.G
I: PAL I
D.K.K1: PAL D/SECAM D.K.K1
• When **SYSTEM** on the front panel is at the NTSC 3.58 position, the NTSC 3.58 system will be selected regardless of the position of the RF selector.

㉗ **VIDEO OUT**
To connect the video cable to a TV or another video recorder.

㉘ **AUDIO OUT**
To connect the audio cable to a TV or another video recorder.

㉙ **RF IN**
To connect to the external aerial.

㉚ **CH ADJ.**
To adjust the RF transmitting channel E32~40 (C24~27, US29~39, J28~38).

㉛ **VIDEO IN**
To connect the video cable to a Movie Camera or another video recorder.

㉜ **AUDIO IN**
To connect the audio cable to a Movie Camera or another video recorder.

㉝ **AC IN~**
To connect to the main power supply.

Infra-red Remote Controller

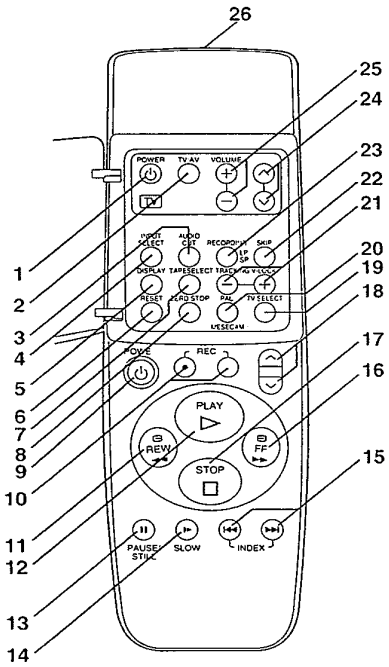

1 POWER (TV)
To switch the TV from on to standby mode or vice versa. In standby mode, the TV is still connected to the mains.
- With some TV models, it may only be possible to switch the TV to standby mode using this button.

2 TV/AV
To select the TV input.

3 AUDIO OUT
To select the desired sound mode.
At the every push of this button, the audio output mode changes as follows.

→Stereo→Left→Right→Normal audio track

The left (L) and Right (R) Indicators show which sound mode is selected in the following way.

Stereo: Both the Left (L) and Right (R) Indicators are lit.
Left: The Left (L) Indicator is lit.
Right: The Right (R) Indicator is lit.
Normal: Both the Left (L) and Right (R) Indicators are not lit.

4 INPUT SELECT
To select the "A1" external recording source.

5 DISPLAY
To change the indication on the VTR Display.

→Clock→Counter→Remaining Tape Time

6 RESET
To reset the tape counter (elapsed time) to "0:00.00".
- The tape counter is automatically reset to "0:00.00" when a video cassette is inserted.

7 TAPE SELECT
To set the cassette tape length in order to obtain correct indication of the remaining tape time.
E195: For E30, -60, -80, -120, -180 and -195 tape
E240: For E240 tape
E260: For E260 tape

8 ZERO STOP
For the zero stop function.

9 POWER (VTR)
To switch the VTR from on to standby mode or vice versa. In standby mode, the VTR is still connected to the mains.

10 REC
To start a recording.
- Press both buttons simultaneously.

11 REW (REWIND)
In the stop mode: To rewind the tape
In the playback mode: To search backward
In the rewind mode: To obtain high speed picture "◁◁" is lit.

12 PLAY
To start playback. "▷" is lit.

13 PAUSE/STILL
During playback: Still picture.
During recording: To interrupt recording.

14 SLOW
For the slow motion playback function.

15 INDEX
For the index search function.

16 FF (FAST FORWARD)
In the stop mode: To fast forward the tape
In the playback mode: To search forward
In the fast forward mode: To obtain high speed picture "▷▷" is lit.

17 STOP
To stop any playback or recording.

18 ∨ ∧ (VTR)
To select the required programme position (TV station) of the VTR.

19 TV SELECT
To set the remote controller for operation of the TV.

20 PAL/MESECAM
Set according to the colour TV system used during recording and playback.
When the MESECAM Indicator is lit, the MESECAM system is selected.

21 TRACKING/V-LOCK
For manual tracking adjustment
The + and – buttons are used to adjust the tracking when, for example, noise bars on the picture are better removed manually than by the automatic digital tracking control. After making a manual adjustment, press both buttons together to return to automatic digital tracking control.

For slow tracking adjustment
When noise bars appear during Still or Slow playback, switch over to slow playback and adjust with the + or – Button to reduce the noise bars.

For vertical locking adjustment
Use the + and – buttons to minimize any vertical jitter during still-picture playback.

22 SKIP
To start cue playback in 30 seconds interval during playback.
- Each press gives a 30 seconds time span up to 4 minutes.

23 RECORDING SP/LP
To select the tape speed desired for recording.
SP gives the best picture quality.
LP gives the longest recording time.

24 ∨ ∧ (TV)
To select the required programme position (TV station) of the TV.

25 VOLUME
To adjust the volume of the TV.

26 Infra-red Transmitter
The programming data are transmitted from here to the VTR.

SECTION 2
ADJUSTMENT PROCEDURES

2-1. DISASSEMBLY METHOD

2-1-1. DISASSEMBLY FLOW CHART

This flow chart indicates disassembly steps of the cabinet parts and the circuit boards in order to find the necessary items for servicing.
When reassembling, perform the steps in the reverse order.

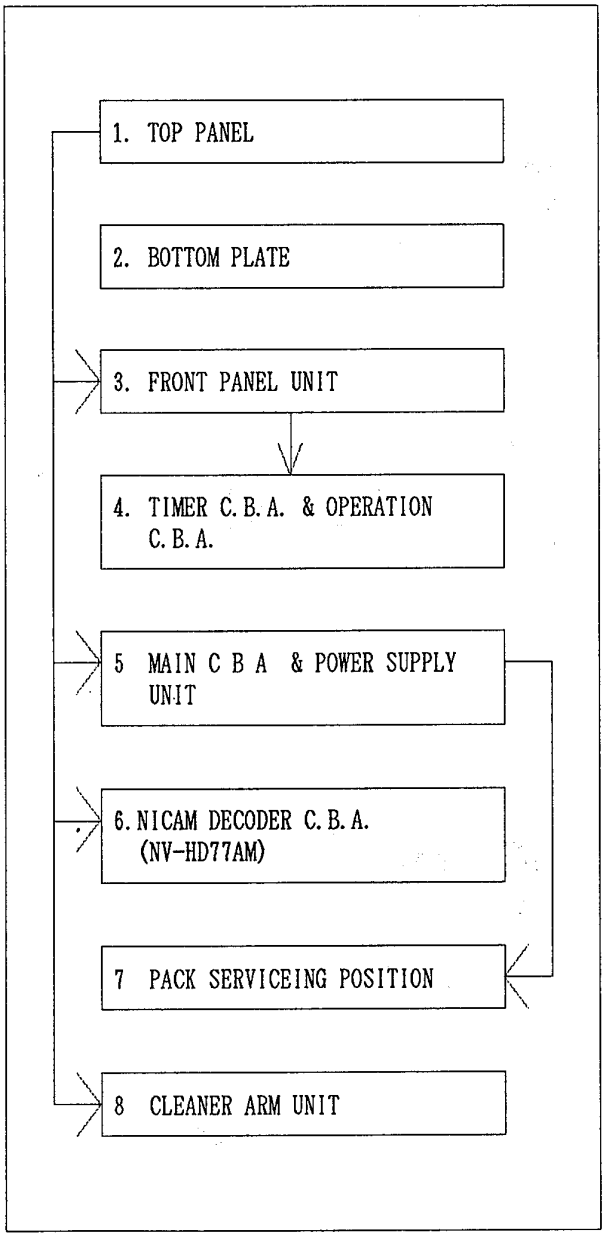

Fig. D1

1. REMOVAL OF THE TOP PANEL

Remove.....4 Screws(A)

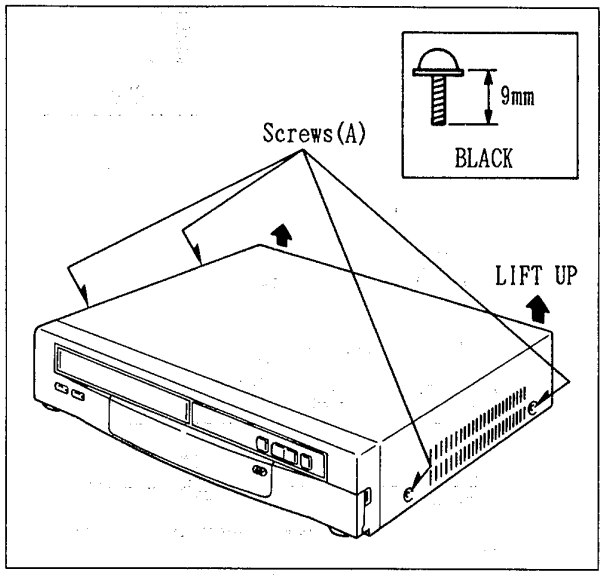

Fig. D2

2. REMOVAL OF THE BOTTOM PLATE

Remove.....6 Screws(B)

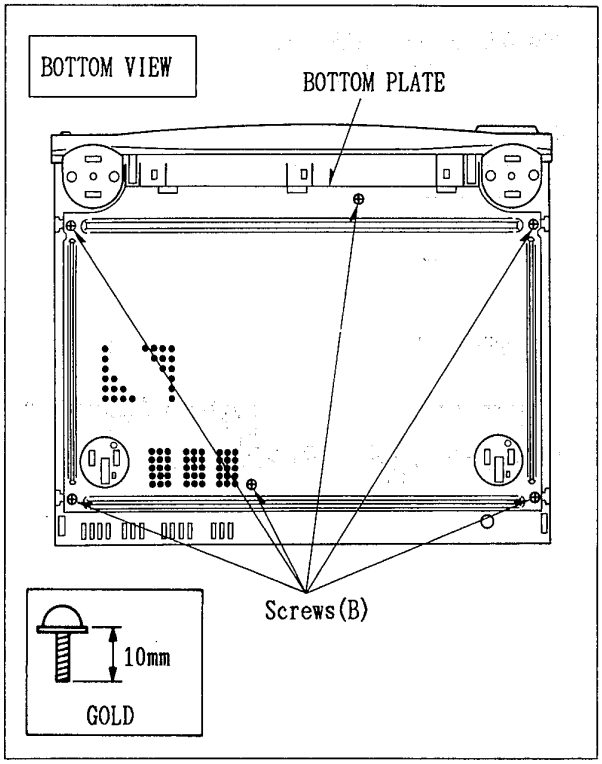

Fig. D3

3 REMOVAL OF THE FRONT PANEL UNIT

Remove.....Screw(C)
Unlock.....8 Tabs(D)

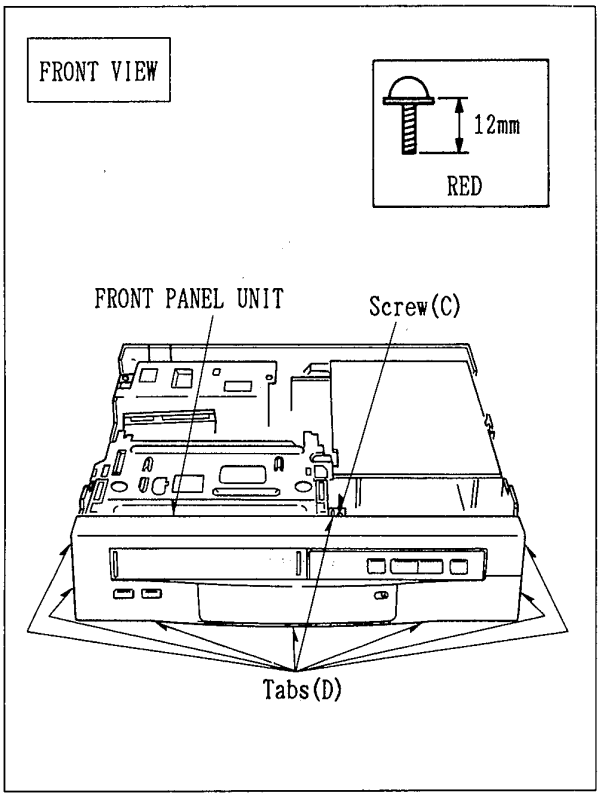

Fig. D4

4. REMOVAL OF THE TIMER C.B.A. & THE OPERATION C.B.A.

Unlock.....8 Tabs(E)

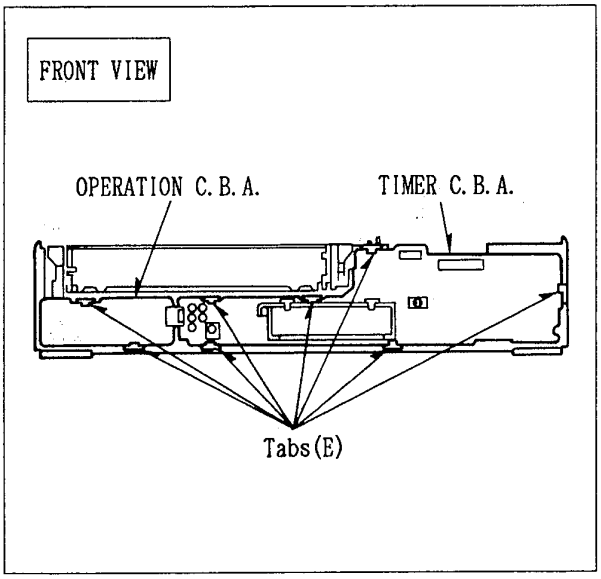

Fig. D5

5. REMOVAL OF THE MAIN C.B.A. & THE POWER SUPPLY UNIT

REMOVAL OF THE MAIN C.B.A.
Remove.....2 Screws(F)
Remove.....3 Screws(G)
Unlock.....Tab(H)

REMOVAL OF THE POWER SUPPLY UNIT
Remove.....2 Screws(I)
Remove.....Screw(J)

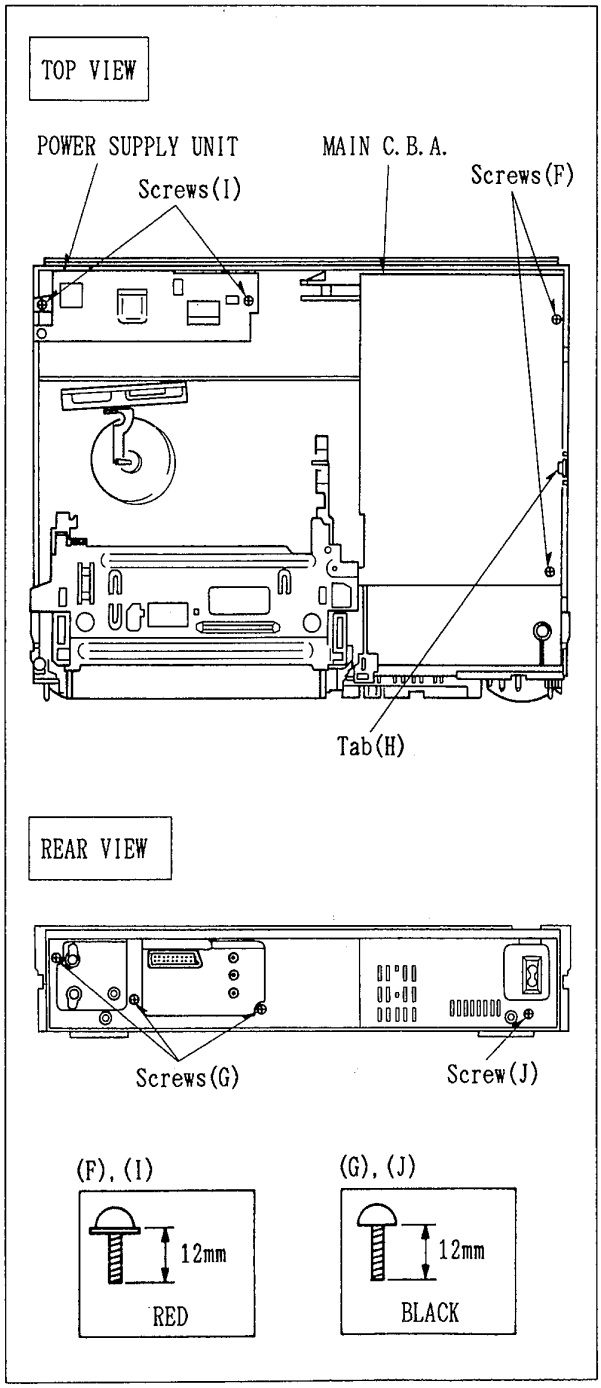

Fig. D6

6 REMOVAL OF THE NICAM DECODER C B A (NV-HD77AM)

Unlock...NICAM HOLDER(K)

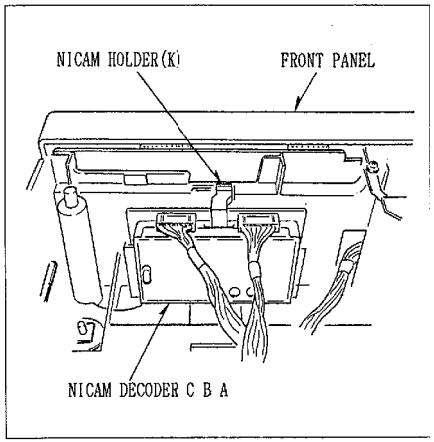

Fig. D7

7. PACK SERVICING POSITION

CAUTION:
Confirm the isolation between Mechanical Chassis and Main C B A before connecting Main AC.

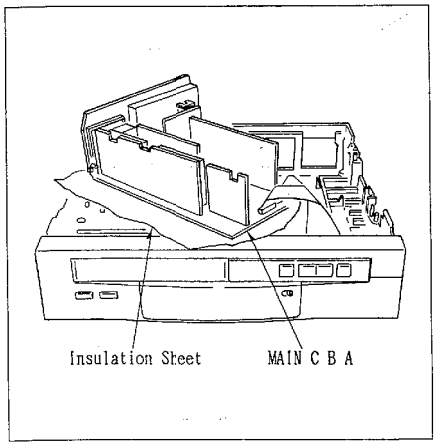

Fig. D8

8 REMOVAL OF THE CLEANER ARM UNIT

Unlock.....Tab(L)

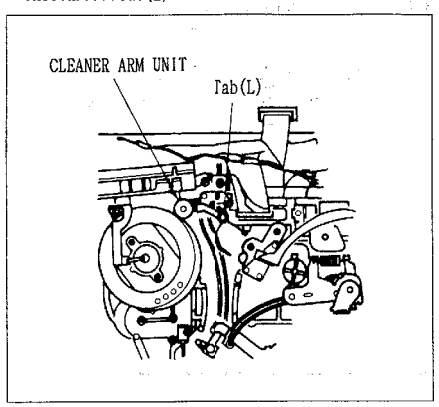

Fig D9

2-2 MECHANICAL ADJUSTMENT PROCEDURES

The mechanical cahssis of this model is the K-Mechanical Chassis.
Therefore refer to the Service Manual for K-Mechanical Chassis. (Order No. VRD9307M131)

CAUTION:
To make a adjustment mode for Tape Interchangeability, connect a jumper wire which has been cut as shown in Fig.M1.
(Auto Tracking is turned off)
After finishing the adjustment, disconnect the jumper wire.

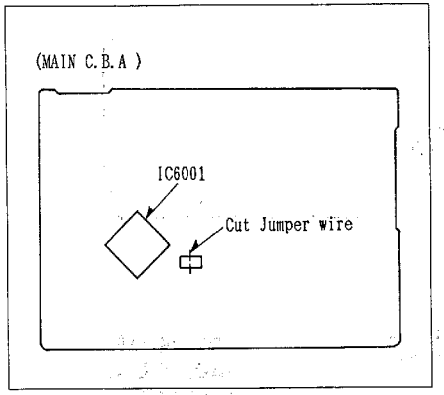

Fig. M1

2-3. DISASSEMBLY PROCEDURES OF MECHANISM

The mechanical chassis of this model is the K-Mechanical Chassis.
Therefore refer to the Service Manual for K-Mechanical Chassis. (Order No. VRD9307M131)

2-4 ASSEMBLY PROCEDURES OF MECHANISM

The mechanical chassis of this model is the K-Mechanical Chassis.
Therefore refer to the Service Manual for K-Mechanical Chassis. (Order No. VRD9307M131)

LOCATION OF TEST POINTS & CONTROLS

MAIN C.B.A.

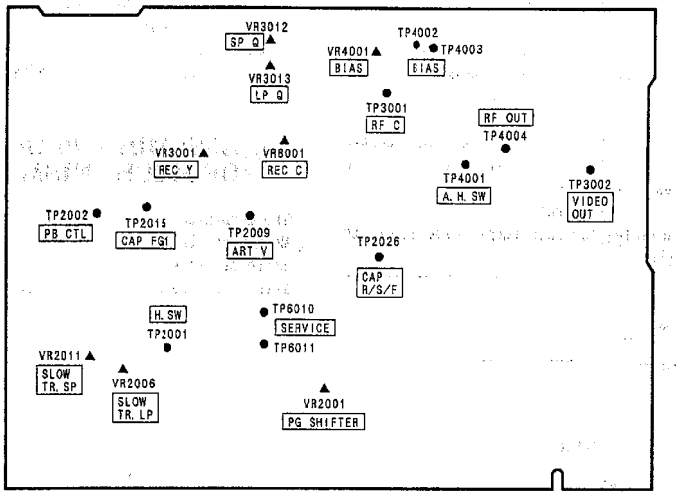

LUMINANCE & CHROMINANCE PACK C B.A.

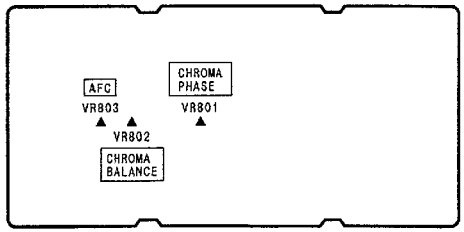

DDR SECAM PACK C.B.A. (NV-HD90EE)

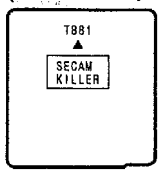

TIMER C.B.A.

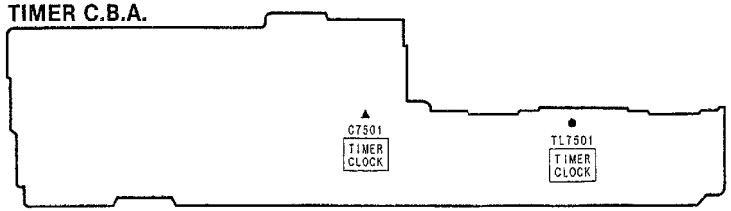

Hi-Fi AUDIO PACK C.B.A.

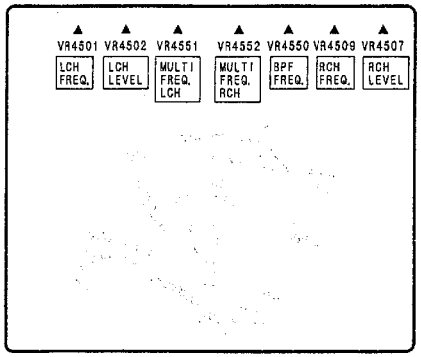

HEAD AMP C.B.A.

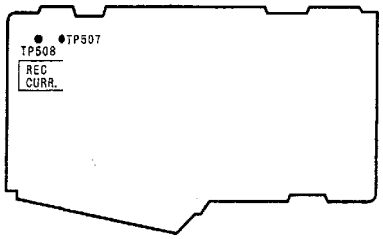

CIRCUIT BOARD LAYOUT

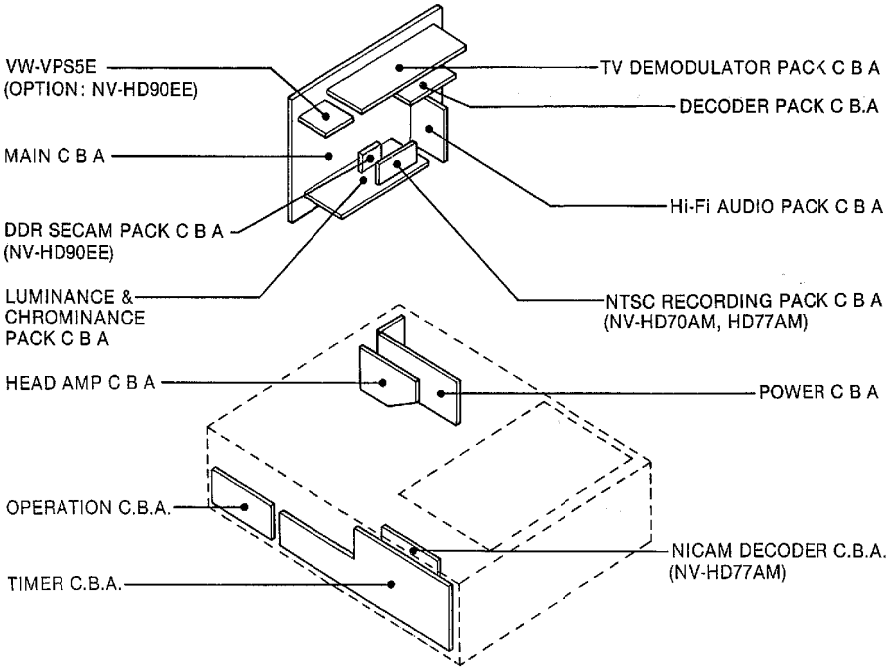

2-5. ELECTRICAL ADJUSTMENT PROCEDURES

This section provides complete adjustment procedures required for electric circuits of VHS Video Cassette Recorders.

2-5-1. TEST EQUIPMENT

To perform electrical adjustments following equipment is required.

1. Dual-Trace Oscilloscope. (More than 35 MHz)
   Voltage Range:0.005-5V/div
   Frequency Range:DC-35MHz
   Probes:10:1 OR 1:1
2. Frequency Counter.
   Frequency Range:0-10MHz
   Probes:1:1
3. Universal Counter.
4. Vacuum Tube Volt Meter. (V.T.V.M.)
5. Video Sweep Generator.
6. Sine Wave Generator.
7. Video Pattern Generator.
8. VHS Alignment Tape. (VFJ8125H3F)
9. VHS Blank Tape.
10. Monitor.
11. Plastic Tip Driver.
12. DC Power Supply.

2-5-2. PREPARATION

During adjustment, set each selector as follows when no indication in the procedure.

TEST SIGNAL SW (REAR).....OFF
SIMUL SW(NV-HD70AM/HD77AM).....OFF
TAPE SPEED.....SP
NICAM/MONO SW(NV-HD77AM).....NICAM
3.58NTSC/4.43NTSC/PAL SW
(NV-HD70AM/HD77AM).....PAL
PAL/MESECAM SW.....PAL

2-5-3. HOW TO READ ADJUSTMENT PROCEDURES

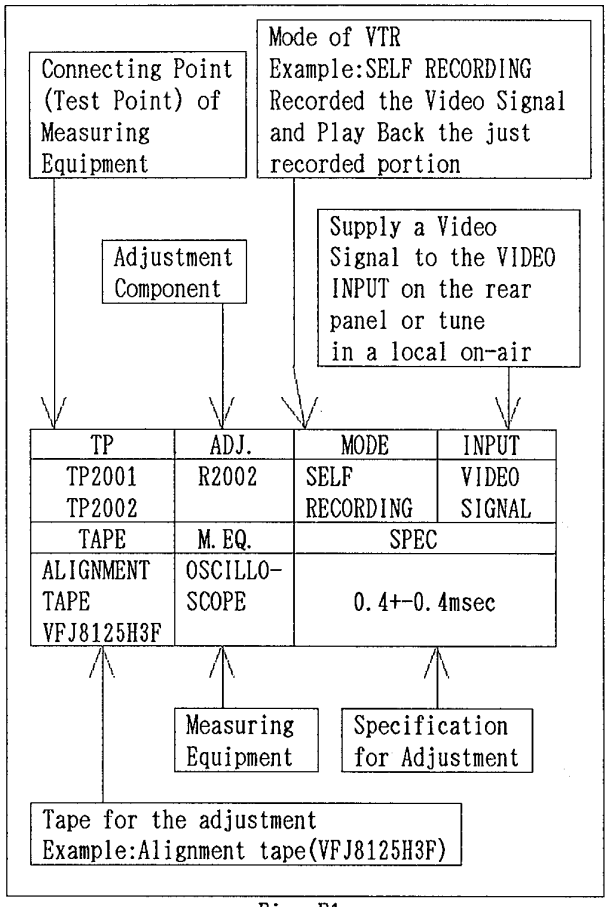

Fig. E1

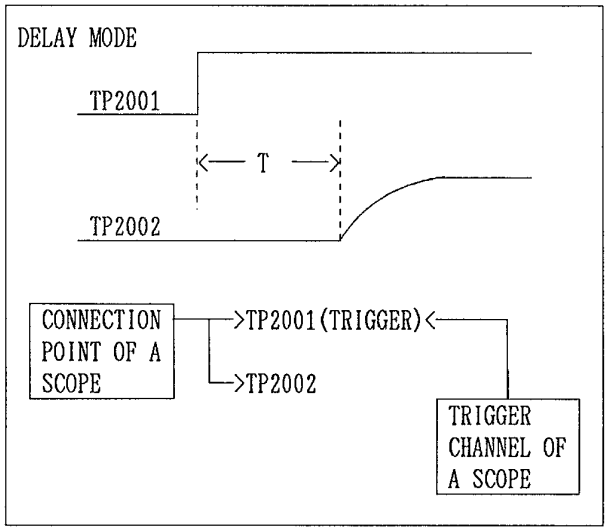

Fig. E2

SERVO SECTION

2-5-4. PG SHIFTER ADJUSTMENT

TP	ADJ.	MODE	INPUT
TP2001 (TEST LAND) VIDEO OUT	VR2001	PLAYBACK	
TAPE	M. EQ.	SPEC	
ALIGNMENT TAPE VFJ8125H3F	OSCILLO-SCOPE	7.0+-0.5(H)	

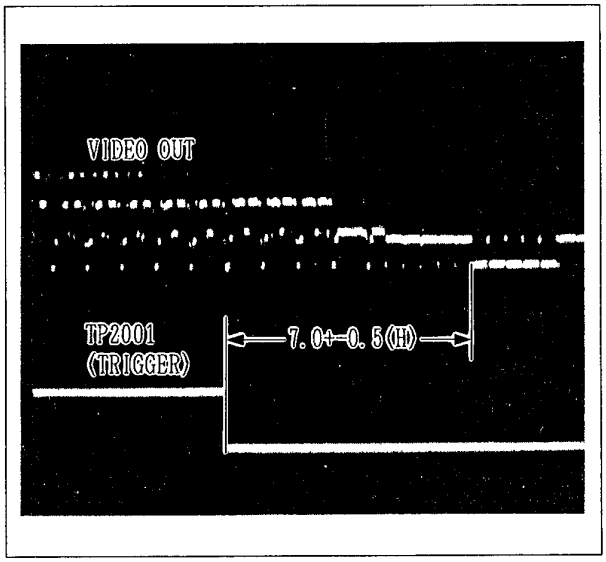

Fig. E3

2-5-5. SLOW TRACKING ADJUSTMENT

TP	ADJ.	MODE	INPUT
MONITOR SCREEN	VR2011 (SP) VR2006 (LP)	(SELF RECORDED) SLOW	CCIR PATTERN
TAPE	M. EQ.	SPEC	
BLANK TAPE	MONITOR TV	Noise bar on the monitor screen is minimized. (Shown in Fig. E5)	

Note: 1. Before this adjustment, connect a jumper which has been cut as shown in Fig. E4.
2. After this adjustment, disconnect a jummper wire.

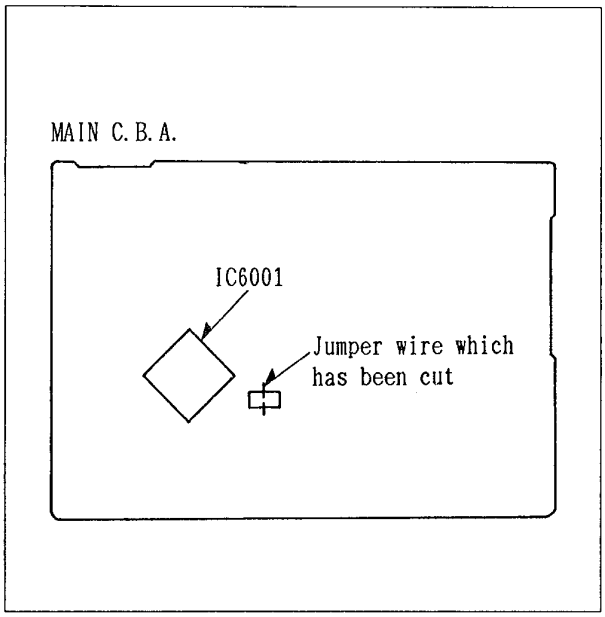

Fig. E4

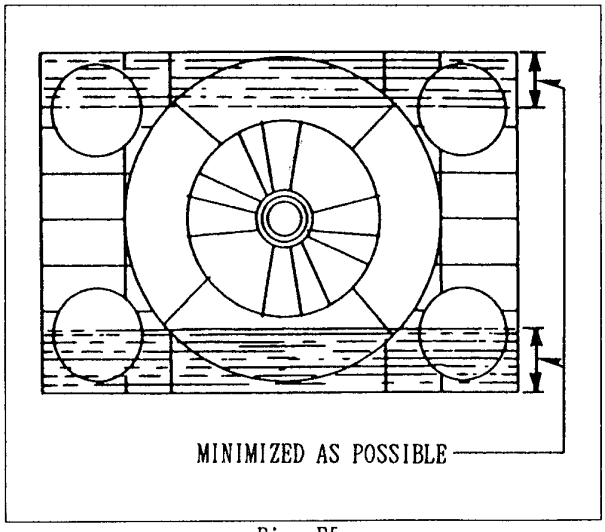

Fig. E5

LUMINANCE & CHROMINANCE SECTION

2-5-6 RECORDING CURRENT ADJUSTMENT

TP	ADJ.	MODE	INPUT
TP507(HOT) TP508(GND)	VR3001(Y) VR8001(C)	SP RECORDING	PAL COLOUR BAR
TAPE	M.EQ.	SPEC	
BLANK TAPE	OSCILLO- SCOPE	Y=130+-5(mVp-p) C=32+-2 (mVp-p)	

Note:1. Adjust the Luminance level so that the peak level of V-SYNC is 130+-5mVp-p.
2. When adjusting the Chrominance level, Supply +5V DC to Pin 6 of PP3001 (TL3004) to eliminate Luminance component.

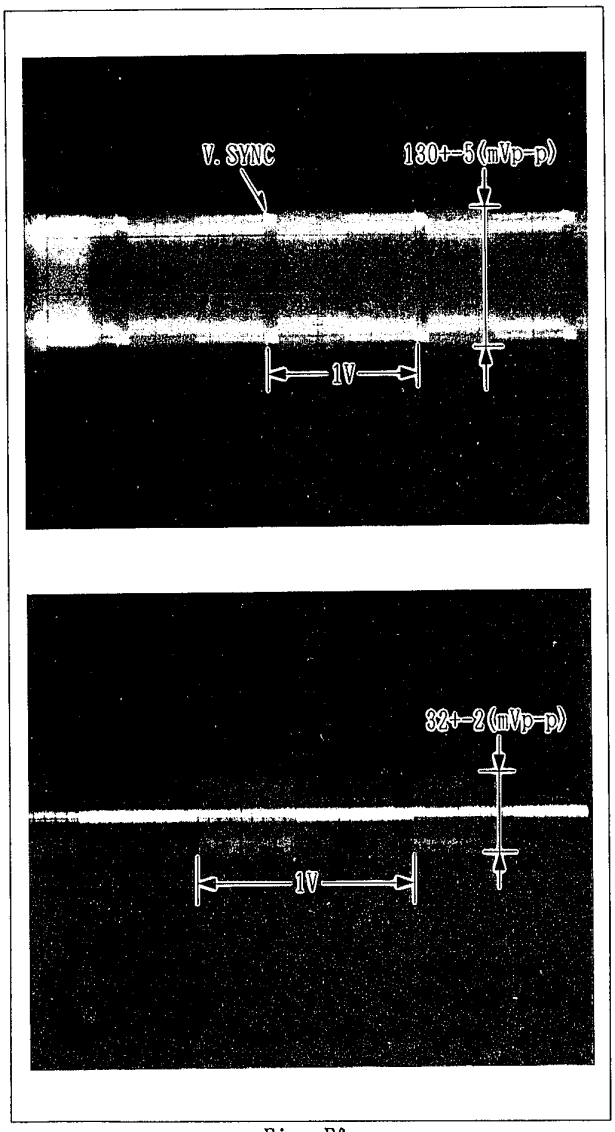

Fig. E6

2-5-7. VIDEO FREQUENCY RESPONSE ADJUSTMENT

TP	ADJ.	MODE	INPUT
VIDEO OUT	VR3012 (SP) VR3013 (LP)	SP/LP (SELF RECORDED) PLAYBACK	VIDEO SWEEP SIGNAL (Shown in Fig.E7)
TAPE	M.EQ.	SPEC	
BLANK TAPE	OSCILLO- SCOPE/ VIDEO SWEEP GENERATOR	SP:0+-1(dB) (90-110%) LP:0+-1(dB) (90-110%)	

Note:1. Set the Video Sweep Signal as shown in Fig.E7.
2. Supply 5.05+-0.15V DC to TL2033 through the resistor(1Kohm).
3. Supply 5.05+-0.15V DC to TL2034 through the resistor(68Kohm).

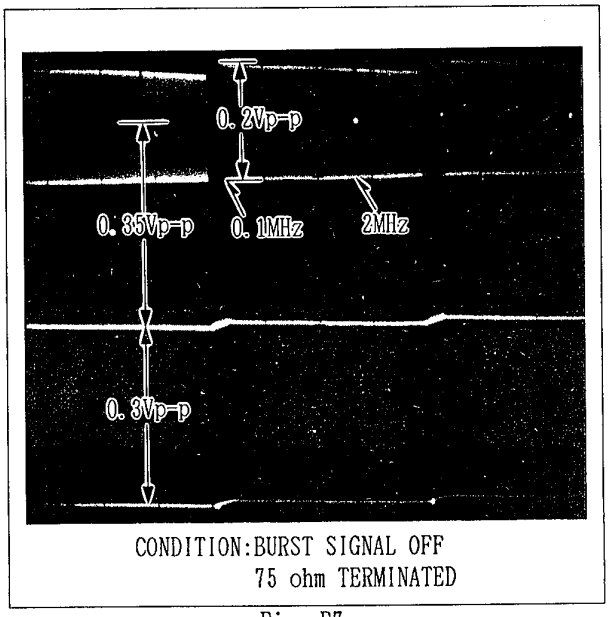

CONDITION:BURST SIGNAL OFF
75 ohm TERMINATED

Fig. E7

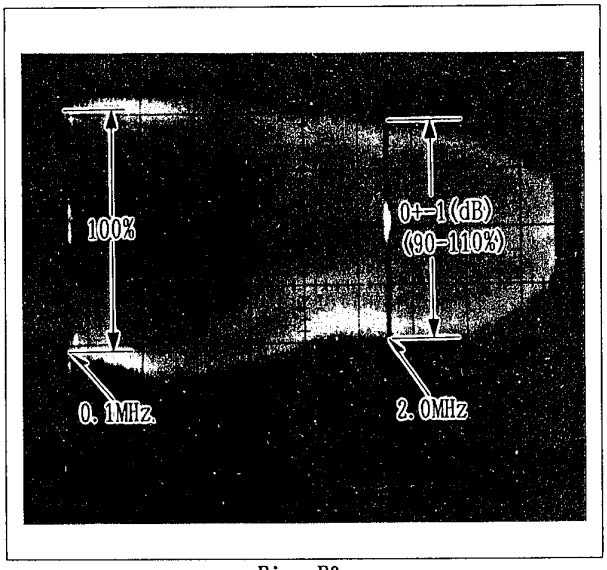

Fig. E8

2-5-8. CHROMINANCE RECURSIVE ADJUSTMENT (NV-HD90EE)

TP	ADJ.	MODE	INPUT
IC301-17	VR801 VR802	(SELF RECORDED) PLAYBACK	PAL COLOUR BAR
TAPE	M. EQ.	SPEC	
BLANK TAPE	OSCILLO-SCOPE	MINIMIZE AMPLITUDE	

Note:1. Before this adjustment, RECORDING CURRENT ADJUSTMENT must be done.

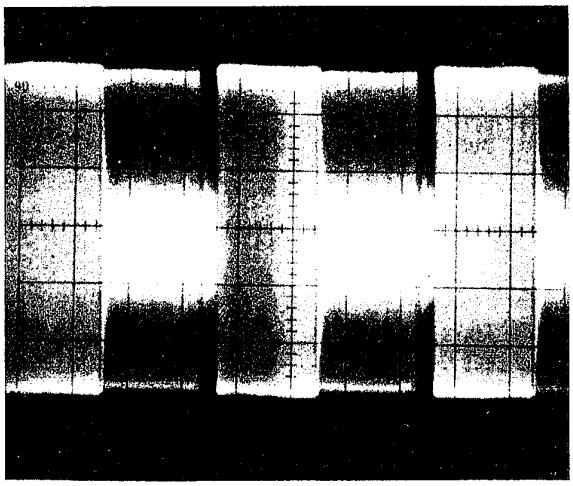

Before adjustment

Fig. E9

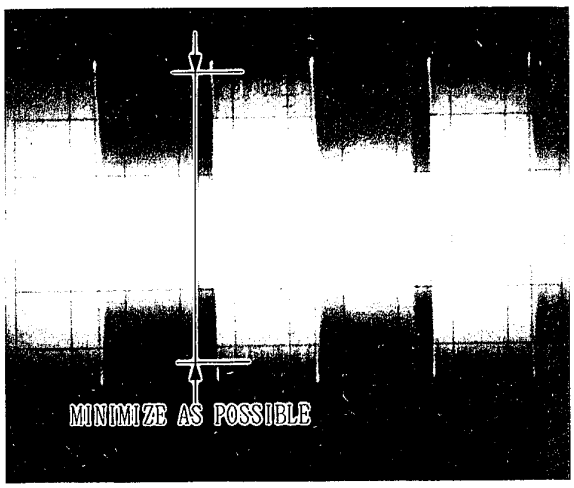

After adjustment

Fig. E10

2-5-9. ARTIFICIAL NTSC AFC FREE RUN ADJUSTMENT.

TP	ADJ.	MODE	INPUT
IC802-9	VR803	STOP	SINEWAVE (8KHz, -10dB) VIDEO IN
TAPE	M. EQ.	SPEC	
	OSCILLO-SCOPE/ SINEWAVE GENERATOR	15735+-100(Hz)	

Note:1. Supply +5V DC to IC802-27.
2. Before adjusting VR803, turn VR803 clockwise or counter-clockwise which is maximum frequency side.

2-5-10. SECAM KILLER ADJUSTMENT (NV-HD90EE)

TP	ADJ	MODE	INPUT
IC881-11	T881	SP RECORDING	SECAM COLOUR BAR
TAPE	M. EQ.	SPEC	
BLANK TAPE	OSCILLO-SCOPE	MINIMIZE AMPLITUDE ("A" PORTION: NEGATIVE PEAK)	

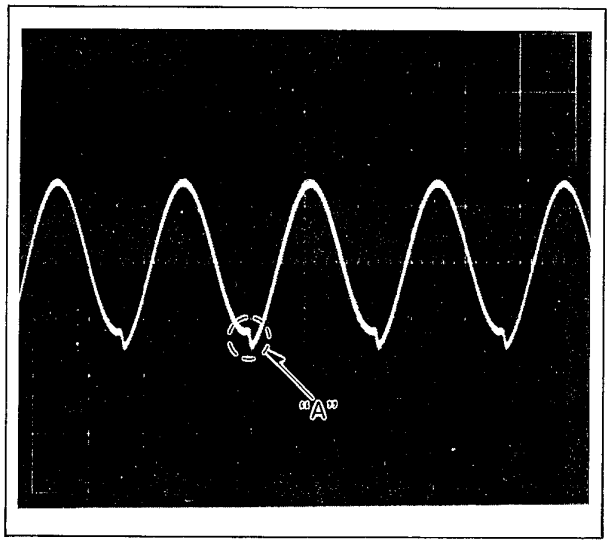

Fig. E11

AUDIO SECTION

2-5-11. BIAS CURRENT ADJUSTMENT

TP	ADJ.	MODE	INPUT
TP4002(HOT/ TEST LAND) TP4003(GND/ TEST LAND)	VR4001	RECORDING	
TAPE	M. EQ.	SPEC	
BLANK TAPE	V. T. V. M.	2. 4+-0. 1(mVrms)	

Note:1. Connect the Audio Input and GND.

2-5-12. CARRIER FREQUENCY ADJUSTMENT

TP	ADJ.	MODE	INPUT
IC4501-34(L) (TL4515) IC4501-47(R) (TL4516)	VR4551(P-L) VR4552(P-R) VR4501(N-L) VR4509(N-R)	SP RECORDING	
TAPE	M. EQ.	SPEC	
BLANK TAPE	FREQUENCY COUNTER	PAL-L:1. 4+-0. 003(MHz) PAL-R:1. 8+-0. 003(MHz) NTSC-L:1. 3+-0. 003(MHz) NTSC-R:1. 7+-0. 003(MHz)	

Note:1. When adjusting VR4501 and VR4509, connect a jumper wire between IC6001-70 and GND (compulsory NTSC mode)
2. After adjusting VR4501 and VR4509, disconnect a jumper wire.

2-5-13. DEVIATION ADJUSTMENT

TP	ADJ.	MODE	INPUT
BETWEEN VR4502 and R4511(L) BETWEEN VR4507 and R4561(R)	VR4502(L) VR4507(R)	SP RECORDING	SINEWAVE (1KHz, -10dB) AUDIO IN (L), (R)
TAPE	M. EQ.	SPEC	
BLANK TAPE	V. T. V. M. / SINEWAVE GENERATOR	120(mVrms)	

Note:1. Before recording the sinewave, set the Signal Gnerator until the both audio outputs (L) and (R) are 400mVrms.

2-5-14. FM B. P. F. ADJUSTMENT

TP	ADJ.	MODE	INPUT
IC4501-33(L) (TL4517) IC4501-48(R) (TL4518)	VR4550	PLAYBACK	1. 608MHz/ 400mVp-p SINEWAVE SIGNAL (PS4003-8)
TAPE	M. EQ.	SPEC	
ALIGNMENT TAPE VFJ8125H3F	OSCILLO-SCOPE/ SINEWAVE GENERATOR	Lch(IC4501-33) = Rch(IC4501-48)	

Note:1. Disconnect P501(from Main C. B. A. to Head Amp Pack)
2. Supply the sinewave signal (1. 608MHz/ 400mVp-p) to PS4003-8.
3 After this adjustment, connect P501

TIMER SECTION

2-5-15. TIMER REFERENCE CLOCK ADJUSTMENT

TP	ADJ.	MODE	INPUT
TL7501	C7501	STOP	
TAPE	M. EQ.	SPEC	
	UNIVERSAL COUNTER	7812. 5+-0. 015(usec)	

Memo

SECTION 3
BLOCK DIAGRAMS

3-1. ABBREVIATIONS

443NT [L]	4.43 NTSC Ⓛ	BIL. [H]	BILINGUAL Ⓗ
A. COMP	AUDIO COMPONENT SIGNAL	BIL/M1 [L]	BILINGUAL Ⓛ
A. COMPO	AUDIO COMPONENT SIGNAL	BS CLOCK	BS CLOCK
A. D.P [L]	AUDIO DUBBING PAUSE Ⓛ	BS DATA	BS DATA
A. D/L [L]	AUDIO DUBBING PAUSE Ⓛ	BS LCH IN	BS L CHANNEL INPUT
A. DEF [S]	AUDIO DEFEAT	BS MIX [H]	BS MIX Ⓗ
A. DEF [S] [L]	AUDIO DEFEAT	BS MON [H]	BS MONITOR Ⓗ
A. DUB P [L]	AUDIO DUBBING PAUSE Ⓛ	BS MONI [H]	BS MONITOR Ⓗ
A. DUB [H]	AUDIO DUBBING Ⓗ	BS RCH IN	BS R CHANNEL INPUT
A. ERASE	AUDIO ERASE	BS VIDEO	BS VIDEO SIGNAL
A. H. SW	AUDIO HEAD SWITCHING PULSE	BS VIDEO/BS1	BS VIDEO SIGNAL
A. HEAD [R]	AUDIO HEAD (REC)	BS [H]	BS Ⓗ
A. HEAD [W]	AUDIO HEAD (PLAY)	BS. LEVEL	BS LEVEL
A. IN [L]	AUDIO INPUT (L)	BS. M [H]	BS MONITOR Ⓗ
A. IN [R]	AUDIO INPUT (R)	BS/VTR [H]	BS/VTR Ⓗ
A. MUT [H]	AUDIO MUTE Ⓗ	BUS CLK	BUS CLOCK
A. MUTE [H]	AUDIO MUTE Ⓗ	BUS LSN	BUS LISTEN
A. OUT [L]	AUDIO OUTPUT (L)	BUS TLK	BUS TALK
A. OUT [R]	AUDIO OUTPUT (R)	BUZZER	BUZZER
A. RF OUT	AUDIO RF SIGNAL OUTPUT	CAP EC	CAPSTAN TORQUE CONTROL
A/VS/S. DATA	AV SW/SERIAL DATA	CAP M GND	CAPSTAN MOTOR GND
AC ONLINE	AC ONLINE	CAP. ET	CAPSTAN TORQUE CONTROL
AC. O/EE. H	AC ONLINE/EE Ⓗ	CAP. FG1	CAPSTAN FG1 PULSE
AFC S C	AFC S CURVE	CAP. FG2	CAPSTAN FG2 PULSE
AFC [S]	AFC S CURVE	CAS. SW	CASSETTE SW
AFC. DEF	AFC DEFEAT	CCN	PLAYBACK CONTROL SIGNAL (−)
ARFC OUT	AUDIO RF SIGNAL OUTPUT	CCP	PLAYBACK CONTROL SIGNAL (+)
ART. V	ARTIFICIAL VERTICAL SYNC SIGNAL	CHM	CONTROL SIGNAL (+)
ART. V. MM	ARTIFICIAL VERTICAL SYNC SIGNAL MONO MULTI	CHP	CONTROL SIGNAL (−)
		CINEM [L]	CINEMA Ⓛ
ART. V/H/N	ARTIFICIAL VERTICAL SYNC SIGNAL Ⓗ/NORMAL	CINEMA [L]	CINEMA Ⓛ
		CINEMA/MIX	CINEMA/MIX
AT. V/H/N	ARTIFICIAL VERTICAL SYNC SIGNAL	CKL	RATCH LOCK
ATSW/TEST/NOR/SE	TEST/NORMAL/SERVICE	CKS	SHIFT LOCK
AUDIO IN [L]	AUDIO INPUT (L)	CL	CLOCK
AUDIO IN [R]	AUDIO INPUT (R)	CLK	CLOCK
AUDIO OUT [L]	AUDIO OUTPUT (L)	CLK (C.G)	CLOCK
AUDIO OUT [R]	AUDIO OUTPUT (R)	CLOCK. IN	CLOCK INPUT
AUDIO SELECT [H]	AUDIO SELECT Ⓗ	CLP	CLAMP
AUDIO. L	AUDIO (L)	COL/B/W/NOR	COLOUR/BLACK & WHITE/NORMAL
AUDIO. R	AUDIO (R)	COLOR [H]	COLOUR Ⓗ
AV CNT	AV CONTROL	CONV	CONVERTOR
AV CTL	AV CONTROL	CS	CHIP SELECT
AV CTL/S. CLK	AV CONTROL/SERIAL CLOCK	CTL GND	CONTROL GND
AV. C.M.	AV CONTROL MODE	CTL HEAD [+]	CONTROL HEAD (+)
AVCNT/METER. R	AV CONTROL/LEVEL METER (R)	CTL HEAD [−]	CONTROL HEAD (−)
AVSW/METER. L	AV SW/LEVEL METER (L)	CTL [+]	CONTROL HEAD (+)
B MODE. H	B MODE Ⓗ	CTL [−]	CONTROL HEAD (−)
B.G.P	BURST GATE PULSE	CUE BIAS	CUE BIAS
BACKUP 5V	BACK UP 5V	CURRENT LIM	CURRENT LIMMITER
BAND. U.E.	BAND U	CYL ET	CYLINDER TORQUE CONTROL
BANDVL. D	BAND VL	CYL GND	CYLINDER GND
BI/MI [L]	BILINGUAL/MIX Ⓛ	D.F.M. REC [H]	DELAIED FM RECORDING Ⓗ
BIL	BILINGUAL	D. FM REC [L]	DELAIED FM RECORDING Ⓛ
BIL [L]	BILINGUAL Ⓛ	D. GND	DIGITAL GND

ABBREVIATIONS

D. REC [H]	DELAYED RECORDING Ⓗ	H. SYNC	HORIZONTAL SYNC
D4/S. LED	D4/STILL LED	H. AMP. SW	HEAD AMP SW PULSE
D4/STILLED	D4/STILL LED	H. P <R>	HEAD PHONE (R)
DAC [CLK]	TUNER DAC (CLOCK)	H. P <L>	HEAD PHONE (L)
DAC/FSCS	TUNER DAC/FS CHIP SELECT	H. P GND	HEAD PHONE GND
DAREC [H]	DELAYED AUDIO RECORDING Ⓗ	H. P OUT [L]	HEAD PHONE OUTPUT (L)
DATA	DATA	H. P OUT [R]	HEAD PHONE OUTPUT (R)
DECODER [L]	DECODER (L)	H. SW	HEAD SW PULSE
DECODER [R]	DECODER (R)	HEAD PHONE [L]	HEAD PHONE (L)
DEW	DEW	HEAD PHONE [R]	HEAD PHONE (R)
DEW SNS	DEW SENSOR	HEAD SW	HEAD SW
DFMRE [H]	DELAYED FM AUDIO RECORDING Ⓗ	HEATER [+]	HEATER (+)
E. REC 5V	EXCEPT RECORDING 5V	HEATER [−]	HEATER (−)
EC	ERR0R TORQUE CONTROL	HSS	HORIZONTAL SYNC SIGNAL
ECR	ERROR TORQUE CONTROL	HTR [+]	HEATER (+)
	REFERENCE VOLTAGE	HTR [−]	HEATER (−)
EDT TRIG [L]	EDIT TRIGGER Ⓛ	I RFE	REFERENCE CURRENT
EDIT [H]	EDIT Ⓗ	ICL	CONTROL AGC CIRCUIT
EE [H]	EE Ⓗ	IF	INTERMEDIATE FREQUENCY
EE [H]/INS [M]	EE Ⓗ/INSERT Ⓜ	IN SELA1	INPUT SELECT A1 POSITION
EE. VV. TR	EE/VV/TRICK PLAY	IN SELA2	INPUT SELECT A2 POSITION
EJECT. PO	EJECT POSITION	IN SELA3	INPUT SELECT A3 POSITION
EJECT/VDET	EJECT/REVERSE SLOW LOCK	INS L/R [L]	INSERT Lch/Rch Ⓛ
ENV. SEL	ENVELOPE SELECT	INS. [H]	INSERT Ⓗ
ENVE. OUT	ENVELOPE OUTPUT	INSEL A1	INPUT SELECT A1 POSITION
ENVE. SEL	ENVELOPE SELECT	INSEL A2	INPUT SELECT A2 POSITION
ENV SELECT	ENVELOPE SELECT	INSERT	INSERT
EP [H]	LP Ⓗ	INSERT [H]	INSERT Ⓗ
EP/LP [H]	LP Ⓗ	IO CS	INPUT/OUTPUT CHIP SELECT
EP/LP/SP	LP/SP	JOG1	JOG1
EP/SS [H]	LP/SLOW/STILL/STOP Ⓗ	JOG S3 LED/FOWRD	JOG LED/FORWARD LED
EPROMCS	EPROM CHIP SELECT	JOG/F. LED	JOG LED/FORWARD LED
EX. REC 5V	EXCEPT RECORDING 5V	JSB [H]	JSB Ⓗ
FF/REW [L]	FIRST FORWARD/REWIND Ⓛ	JST. CLCK	JUST CLOCK
FG1 IN	FG1 PULSE INPUT	JST. CLK	JUST CLOCK
FG2 IN	FG2 PULSE INPUT	JST. CLOCK	JUST CLOCK
FILTER ADJUSTMEN	FILTER ADJUSTMENT	L. OUT	Lch OUTPUT
FLY ERASE [H]	FLYING ERASE HEAD ON Ⓗ	L. CH [H]	Lch Ⓗ
FLY ON [H]	FLYING ERASE E HEAD ON Ⓗ	L. CH [L]	Lch Ⓛ
FLY. E [H]	FLYING ERASE HEAD ON Ⓗ	LED (MAIN)	LED (MAIN)
FM MUT [H]	FM AUDIO MUTE Ⓗ	LED (STEREO)	LED (STEREO)
FM MUTE [H]	FM AUDIO MUTE Ⓗ	LED (SUB)	LED (SUB)
FM OUT [L]	FM OUTPUT (L)	LED CKL	LED SERIAL CLOCK
FM OUT [R]	FM OUTPUT (R)	LED CKS	LED SERIAL CLOCK
FM PACK OUT [L]	FM PACK OUTPUT (L)	LED DATA	LED SERIAL DATA
FM PACK OUT [R]	FM PACK OUTPUT (R)	LINE IN 1 [L]	LINE INPUT 1 (L)
FM/BS SEL [L]	FM/BS SELECT (L)	LINE IN 1 [R]	LINE INPUT 1 (R)
FM/BS SEL [R]	FM/BS SELECT (R)	LINE IN 2 [L]	LINE INPUT 2 (L)
FS. CLK	FS CLOCK	LINE IN 2 [R]	LINE INPUT 2 (R)
FUL. E [H]	FULL ERASE HEAD ON Ⓗ	LINE IN V	LINE INPUT VIDEO
FULL. E [H]	FULL ERASE HEAD ON Ⓗ	LINE IN [L]	LINE INPUT (L)
FULL. E. 12V	FULL ERASE 12V	LINE IN [R]	LINE INPUT (R)
GND [A]	GND (ANALOGUE)	LINE OUT [L]	LINE OUTPUT (L)
GND [TU]	GND (TUNER)	LINE OUT [R]	LINE OUTPUT (R)
GND/N. SW. 12V	GND/NON SW 12V	LP [H]	LP Ⓗ

LPTRI [L]	LP TRICK PLAY Ⓛ	P. OFF [L]	POWER OFF Ⓛ
Lch/A. DUB	Lch/AUDIO DUBBING	PAL [H]	PAL Ⓗ
M GND	MOTOR GND	PAL [L]/NTSC [H]	PAL Ⓛ/NTSC Ⓗ
M REG	MOTOR REGULATOR	PB ADJ OUT	PLAYBACK ADJUST OUTPUT
MAIN OUT	MAIN OUTPUT	PB OUT	PLAYBACK OUTPUT
MAIN [L]	MAIN Ⓛ	PB. H	PLAYBACK Ⓗ
MAIN/MONO	MAIN/MONAURAL	PFG	PG/FG
MAX IN	MAXIMAM INPUT	PHOTSN +B	PHOTO SENSOR +B
MES [H]	MESECAM Ⓗ	PICT. CNT	PICTURE CONTROL
MESE [H]	MESECAM Ⓗ	PLAY LED/RVS LED	PLAY LED/REVERSE LED
MESE [L]	MESECAM Ⓛ	PLAY. PO	PLAY POSITION
METER 5V	LEVEL METER 5V	PLAY/R. LED	PLAY LED/REVERSE LED
METER [L]	LEVEL METER (L)	PLY/DEW	PLAY/DEW Ⓗ
METER [R]	LEVEL METER (R)	POWER OFF [L]	POWER OFF Ⓛ
METER. L/AVS	LEVEL METER (L)	PREROLL [H]	PREROLL Ⓗ
METER. R/AVC	LEVEL METER (R)	PWRFAIL	POWER FAILURE DETECT
MI/BI [L]	MIX Ⓗ/BILIGUAL	R. CH [H]	Rch Ⓗ
MIC GND	MIC GND	R. CH [L]	Rch Ⓛ
MIC IN	MIC INPUT	R. ST	RESET
MIC IN [L]	MIC INPUT (L)	R/S/F	REVERSE Ⓗ/STOP Ⓜ/FORWARD Ⓛ
MIC IN [R]	MIC INPUT (R)	RCH [H]	Rch Ⓗ
MIC [H]	MIC Ⓗ	REC 12V	RECORDING 12V
MIX [H]	MIX Ⓗ	REC CHROMA	RECORDING CHROMINANCE SIGNAL
MIX [H]/CINEMA [L]	MIX Ⓗ/CINEMA SOUND Ⓛ	REC H	RECORDING Ⓗ
MIX/CINE	MIX Ⓗ/CINEMA SOUND Ⓛ	REC IN	RECORDING INPUT
MIX/CINEMA [L]	MIX Ⓗ/CINEMA SOUND Ⓛ	REC OUT [L]	RECORDING OUTPUT Ⓛ
MN. H/M. L	MONAURAL Ⓗ/MAIN Ⓛ	REC START	RECORDING START
MN. H/MAI. L	MONAURAL Ⓗ/MAIN Ⓛ	REC VR [C]	RECORDING VOLUME (COMMON)
MN2/MES. L	MONAURAL 2/MESECAM Ⓛ	REC VR [L]	RECORDING VOLUME (L)
MODE SEL	AUDIO MODE SELECT	REC VR [R]	RECORDING VOLUME (R)
MODE SW	AUDIO MODE SW	REC Y	RECORDING LUMINANCE SIGNAL
MODE. S. IN	AUDIO MODE SELECT INPUT	REC [H]	RECORDING Ⓗ
MODE. S. OUT	AUDIO MODE SELECT OUTPUT	REC. C	RECORDING CHROMINANCE SIGNAL
MONO [H]	MONAURAL Ⓗ	REC. Y	RECORDING LUMINANCE SIGNAL
MONO [H]/MAIN [L]	MONAURAL Ⓗ/MAIN Ⓛ	REC/EE CTL	RECORDING/EE CONTROL
MONO2 [L]	MONAURAL·2	REEL-T	REEL PULSE (TAKE-UP)
MONO2/MESE [FM(L)]	MONAURAL 2/MESECAM (FM Ⓛ)	REEL-S	REEL PULSE (SUPPLY)
MOTOR GND	MOTOR GND	REGULATOR FILTER	REGULATOR FILTER
MUTE	MUTE	RESET	RESET
N. A. REC [L]	NORMAL AUDIO RECORDING	REV M F/R	REVIEW MOTOR FORWARD/REVERSE
N. SW 12V	NON SW 12V		
N. SW. 5. DET	NON SW 5V DETECT	REV M V1	REVIEW MOTOR V1
NICAM	NICAM	REV M V2	REVIEW MOTOR V2
NICAM [L]	NICAM Ⓛ	REV MOTOR F/R	REVIEW MOTOR FORWARD/REVERSE
NOL [H]	PAL Ⓗ/4.43 NTSC Ⓜ/3.58 NTSC Ⓛ		
NOR/SOFT [H]	NORMAL/SOFT TAPE PLAY Ⓗ	REV MOTOR V1	REVIEW MOROR V1
NORMAL [H]	NORMAL Ⓗ	REV MOTOR V2	REVIEW MOTOR V2
NR BIAS	NR BIAS	REV MOTOR [+]	REVIEW MOTOR (+)
NTSC [L]	NTSC Ⓛ	REV MOTOR [−]	REVIEW MOTOR (−)
OCH	CONTROL AGC CIRCUIT	REV. M. GND	REVIEW MOTOR GND
OUT	OUTPUT	RF. CHROMA	RF CHROMINANCE SIGNAL
P-OFF [H]	POWER OFF Ⓗ	RF OUT	RF OUTPUT
P-OFF [L]	POWER OFF Ⓛ	RF Y	RF LUMINANCE SIGNAL
P. FAIL	POWER FAILURE DETECT	RF. Y. IN	RF LUMINANCE SIGNAL INPUT
P. OFF [H]	POWER OFF Ⓗ	RF. Y. OUT	RF LUMINANCE SIGNAL OUTPUT

ABBREVIATIONS

ROTAR. SW	ROTARY SW	T. BUSCLK	TIMER BUS CLOCK
ROTARY	ROTARY SW	T. BUSLSN	TIMER BUS LISTEN
RST	RESET	T. BUSTLK	TIMER BUS TALK
RST [L]	RESET Ⓛ	T. END [L]	TAPE END Ⓛ
Rch/INST	Rch/INSERT	T. PHOTO	TAKE-UP PHOTO TRANSISTOR
S IN	SERIAL DATA INPUT	TAPE END [L]	TAPE END Ⓛ
S OUT	SERIAL DATA OUTPUT	TAPE END [L]/CAM	TAPE END Ⓛ/CAMERA PAUSE
S-PHOTO	SUPPLY PHOTO TRANSISTOR	TEST	TEST MODE
S-RL. PLS	SUPPLY REEL PULSE	TPZ	TRAPEZOIDAL WAVE CIRCUIT
S. CLK	SERIAL CLOCK	TRIC [L]	TRIC PLAY Ⓛ
S. CLK/AV	SERIAL CLOCK/AV	TRICK [L]	TRIC PLAY Ⓛ
S. DATA	SERIAL DATA	TRK. ENV	AUTO TRACKING ENVELOPE DETECT
S. DATA/A	SERIAL DATA	TU. AUDIO	TUNER AUDIO
S. PHOTO	SUPPLY PHOTO TRANSISTOR	TU. GND	TUNER GND
S. TAB [L]	SAFETY TAB SW ON Ⓛ	TU. V. IN	TUNER VIDEO SIGNAL INPUT
S/P/N	SECAM/PAL/NTSC	TU. VIDEO	TUNER VIDEO
SC IN	SERIAL CLOCK INPUT	TUN NOR IN	TUNER NORMAL INPUT
SC OUT	SERIAL CLOCK OUTPUT	TUN R	TUNER AUDIO (R)
SCK SELECT	SERIAL CLOCK SELECT	TUN. AUDIO IN	TUNER AUDIO INPUT
SEL OUT [L]	SELECT OUTPUT (L)	TUNER 12V	TUNER 12V
SEL OUT [R]	SELECT OUTPUT (R)	TUNER L	TUNER AUDIO (L)
SHUTTLE 1	SHUTTLE 1	TUNER V IN	TUNER VIDEO SIGNAL INPUT
SIF	SOUND INTERMEDIATE FREQUENCY	TUNER [L]	TUNER AUDIO (L)
SLMUT [H]	INPUT SELECT MUTE Ⓗ	TUNER [N]	TUNER AUDIO (NORMAL)
SLNID [+]	SOLENOID (+)	TUNER [R]	TUNER AUDIO (R)
SLNID [−]	SOLENOID (−)	TUNER. 12	TUNER 12V
SLW TR. MM	SLOW TRACKING MONO MULTI	TUOFF [H]	TUNER OFF Ⓗ
SLW TR. REF	SLOW TRACKING REFERENCE VOLTAGE	TV. AUDIO	TV AUDIO
		TV/VTR	TV/VTR
SNS. GND	SENSOR GND	TXTON [L]	TEXT ON Ⓛ
SOFT [H]	SOFT TAPE PLAY Ⓗ	U. REG45V	UNREGULATOR 45V
SOFT [H]/NORMAL	SOFT TAPE PLAY Ⓗ/NORMAL Ⓗ	UNREG	UNREGULATOR
SOLENOID ON [L]	SOLENOID ON Ⓛ	UNREG19V	UNREGULATOR 19V
SP [H]	SP Ⓗ	V. REF	REFERENCE VOLTAGE
SP/L/SLP	SP/LP	V. EE [H]	VIDEO EE Ⓗ
SSS [L]	SLOW/STILL/STOP	V. EE [L]	VIDEO EE Ⓛ
STEREO LED	STEREO LED	VCO REF	RERERENCE OSCILLATER
STEREO [H]	STEREO Ⓗ	VD. IN	VIDEO SIGNAL INPUT
STEREO [L]	STEREO Ⓛ	VD. OUT	VIDEO SIGNAL OUTPUT
STOP. PO	STOP POSITION	VIDEO EE [L]	VIDEO EE Ⓛ
STOP/5V	STOP POSITION/5V	VIDEO IN	VIDEO SIGNAL INPUT
STOP1/TAPE SEL	STOP1 POSITION/TAPE SELECT	VIDEO OUT	VIDEO SIGNAL OUTPUT
STOP1/PAL:ST	STOP1 POSITION/PAL	VM	MOTOR VOLTAGE
STOP2. PO	STOP 2 POSITION	VM DOWN [L]	MOTOR VOLTAGE DOWN Ⓛ
STOP2/S-TAB	STOP 2 POSITION/SAFETY TAB SW	VSS	VERTICAL SYNC SIGNAL
STREO [H]	STEREO Ⓗ	VTR [H]	VTR Ⓗ
SUB BIAS	SUB BIAS	VTR. 12V	VTR 12V
SUB. SW	SUB SW	X IN	OSCILLATOR INPUT
SVHS CAS [L]	S-VHS CASSETTE Ⓛ	X OUT	OSCILLATOR OUTPUT
SW. 5. DET	SW 5V DETECT		
SYNC [L]	SYNC Ⓛ		
SYSCON 5V	SYSTEM CONTROL 5V		
SYSTEM	SYSTEM SW		
T-PHOTO	TAKE-UP PHOTO TRANSISTOR		
T-RL. PLS	TAKE-UP REEL PULSE		

3-2. SYSTEM CONTROL & SERVO BLOCK DIAGRAM

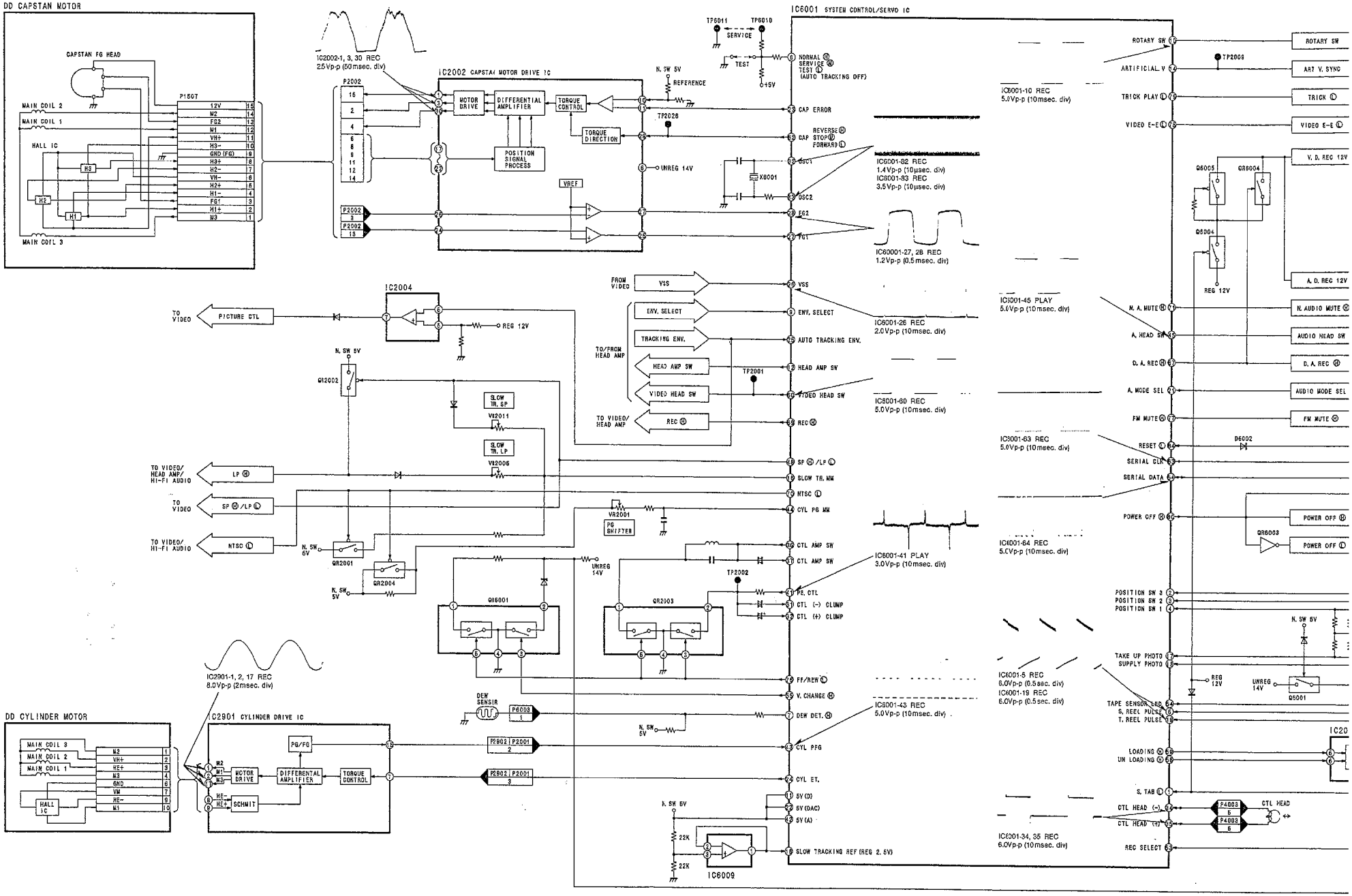

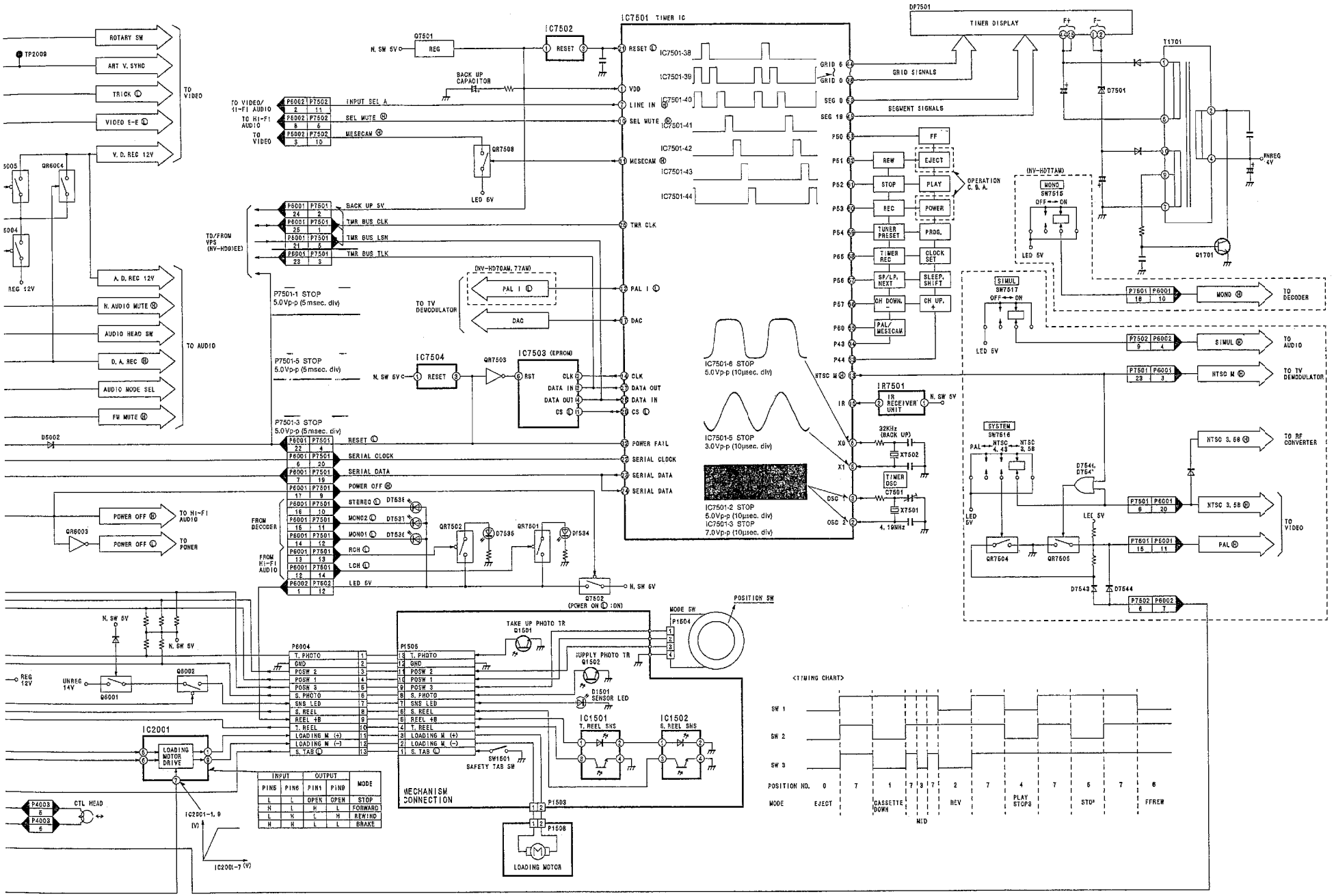
IC7501 TIMER IC
IC7502
IC7503 (EPROM)
IC7504
IR7501
DP7501
TIMER DISPLAY
T1701
Q1701
ROTARY SW
ART V. SYNC
TRICK
VIDEO E-E
V. D. REC 12V
TO VIDEO
A. D. REC 12V
N. AUDIO MUTE
AUDIO HEAD SW
D. A. REC
AUDIO MODE SEL
FM MUTE
TO AUDIO
POWER OFF
TO HI-FI AUDIO
TO POWER
INPUT SEL A
SEL MUTE
MESECAM
BACK UP 5V
TMR BUS CLK
TMR BUS LSN
TMR BUS TLK
TO/FROM VPS (NV-HD90EE)
TO TV DEMODULATOR
P7501-1 STOP 5.0Vp-p (5msec. div)
P7501-5 STOP 5.0Vp-p (5msec. div)
P7501-3 STOP 5.0Vp-p (5msec. div)
RESET
SERIAL CLOCK
SERIAL DATA
POWER OFF
STEREO
MONO2
MONO1
RCH
LCH
LED 5V
FROM DECODER
FROM HI-FI AUDIO
POWER FAIL
CLK
DATA OUT
DATA IN
CS
PAL I
DAC
GRID SIGNALS
SEGMENT SIGNALS
OPERATION C. B. A.
FF
REW
EJECT
STOP
PLAY
REC
POWER
TUNER PRESET
PROG.
TIMER REC
CLOCK SET
SP/LP, NEXT
SLEEP, SHIFT
CH DOWN
CH UP
PAL/MESECAM
NTSC M
IC7501-6 STOP 5.0Vp-p (10μsec. div)
IC7501-5 STOP 3.0Vp-p (10μsec. div)
IC7501-2 STOP 5.0Vp-p (10μsec. div)
IC7501-3 STOP 7.0Vp-p (10μsec. div)
32KHz (BACK UP)
TIMER OSC
4.19MHz
MONO SW7515
SIMUL SW7517
SYSTEM SW7616
MONO
SIMUL
NTSC M
NTSC 3.58
PAL
TO DECODER
TO AUDIO
TO TV DEMODULATOR
TO RF CONVERTER
TO VIDEO
MODE SW
POSITION SW
TAKE UP PHOTO TR
SUPPLY PHOTO TR
SENSOR LED
SAFETY TAB SW
MECHANISM CONNECTION
LOADING MOTOR
LOADING MOTOR DRIVE
CTL HEAD
INPUT
OUTPUT
MODE
STOP
FORWARD
REWIND
BRAKE
<TIMING CHART>
SW 1
SW 2
SW 3
POSITION NO.
MODE
EJECT
CASSETTE DOWN
REV
PLAY STOP2
STOP
FFREW
MID

3-3 LUMINANCE & CHROMINANCE BLOCK DIAGRAM (NV-HD70AM, HD77AM)

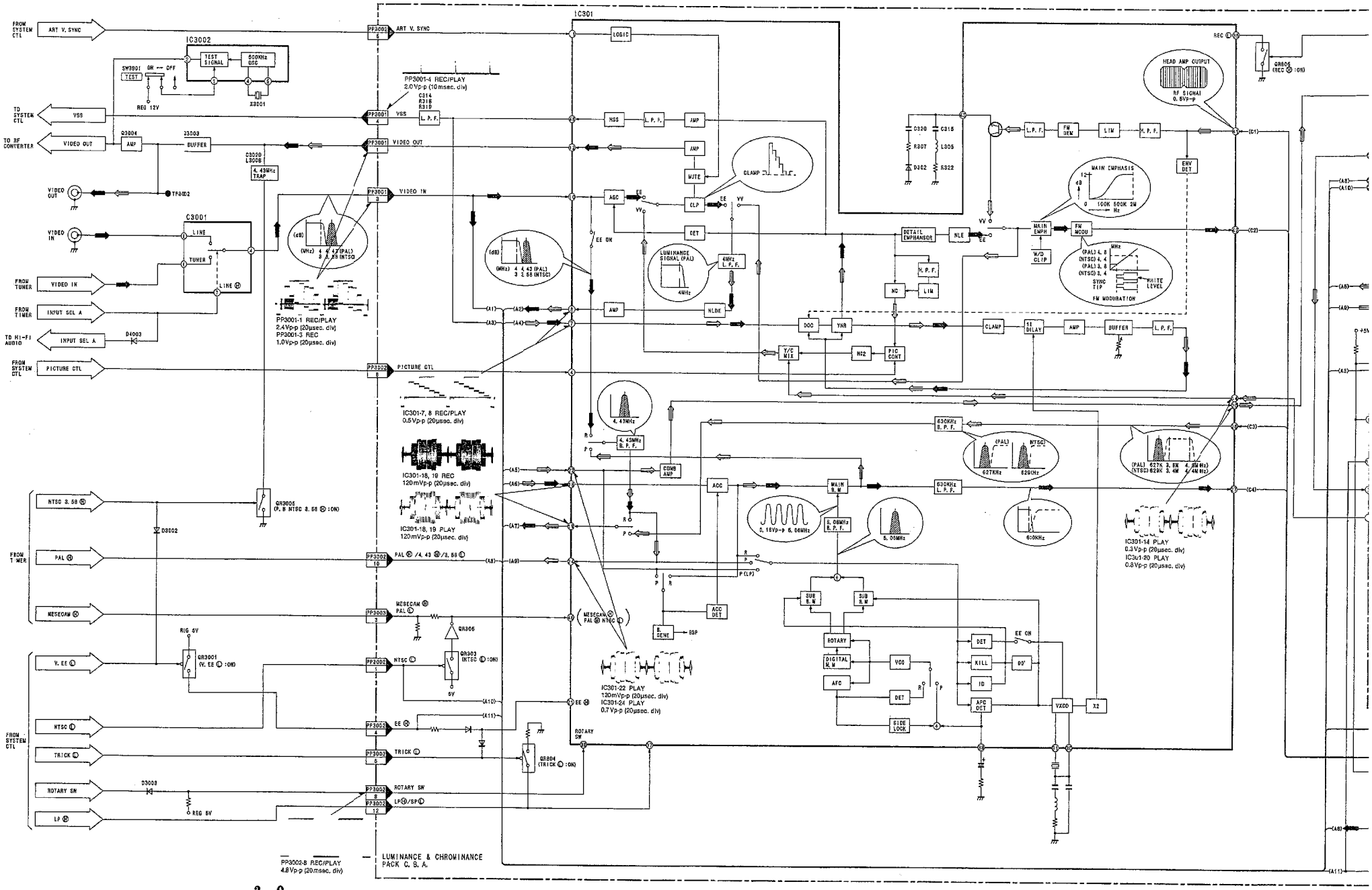

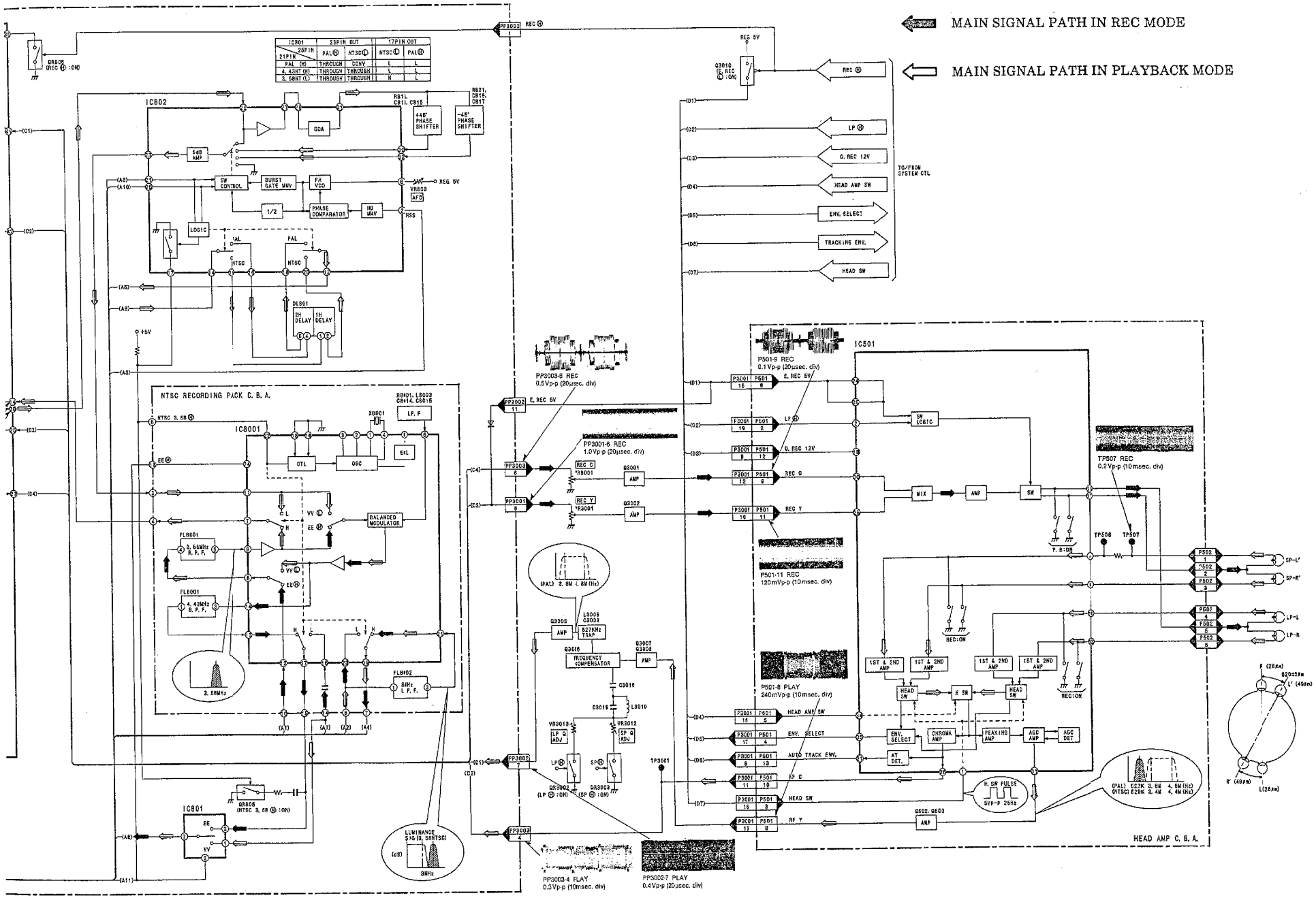
MAIN SIGNAL PATH IN REC MODE
MAIN SIGNAL PATH IN PLAYBACK MODE
IC801 | 23PIN OUT | 17PIN OUT
26PIN / 21PIN | PAL | NTSC | NTSC | PAL
PAL (H) | THROUGH | CONV | L | L
4. 43KT (H) | THROUGH | THROUGH | L | L
3. 58KT (L) | THROUGH | THROUGH | H | L
IC802
GCA
6dB AMP
SW CONTROL
BURST GATE MWV
FM VCO
1/2
PHASE COMPARATOR
HD MWV
LOGIC
+45° PHASE SHIFTER
-45° PHASE SHIFTER
DL801
1H DELAY
NTSC RECORDING PACK C. B. A.
IC8001
CTL
OSC
BALANCED MODULATOR
LP. F
IC801
REC
LP
D. REC 12V
HEAD AMP SW
ENV. SELECT
TRACKING ENV.
HEAD SW
TO/FROM SYSTEM CTL
IC501
MIX
AMP
SW
1ST & 2ND AMP
HEAD SW
H SW
ENV. SELECT
CHROMA AMP
PEAKING AMP
AGC AMP
AGC DET
AT DET.
HEAD AMP C. B. A.
SP-L'
SP-R'
LP-L
LP-R
PP3003-8 REC
0.5Vp-p (20μsec. div)
PP3001-6 REC
1.0Vp-p (20μsec. div)
P501-9 REC
0.1Vp-p (20μsec. div)
TP507 REC
0.2Vp-p (10msec. div)
P501-11 REC
120mVp-p (10msec. div)
P501-8 PLAY
240mVp-p (10msec. div)
PP3003-4 PLAY
0.3Vp-p (10msec. div)
PP3002-7 PLAY
0.4Vp-p (20μsec. div)

3-4 LUMINANCE & CHROMINANCE BLOCK DIAGRAM (NV-HD90EE)

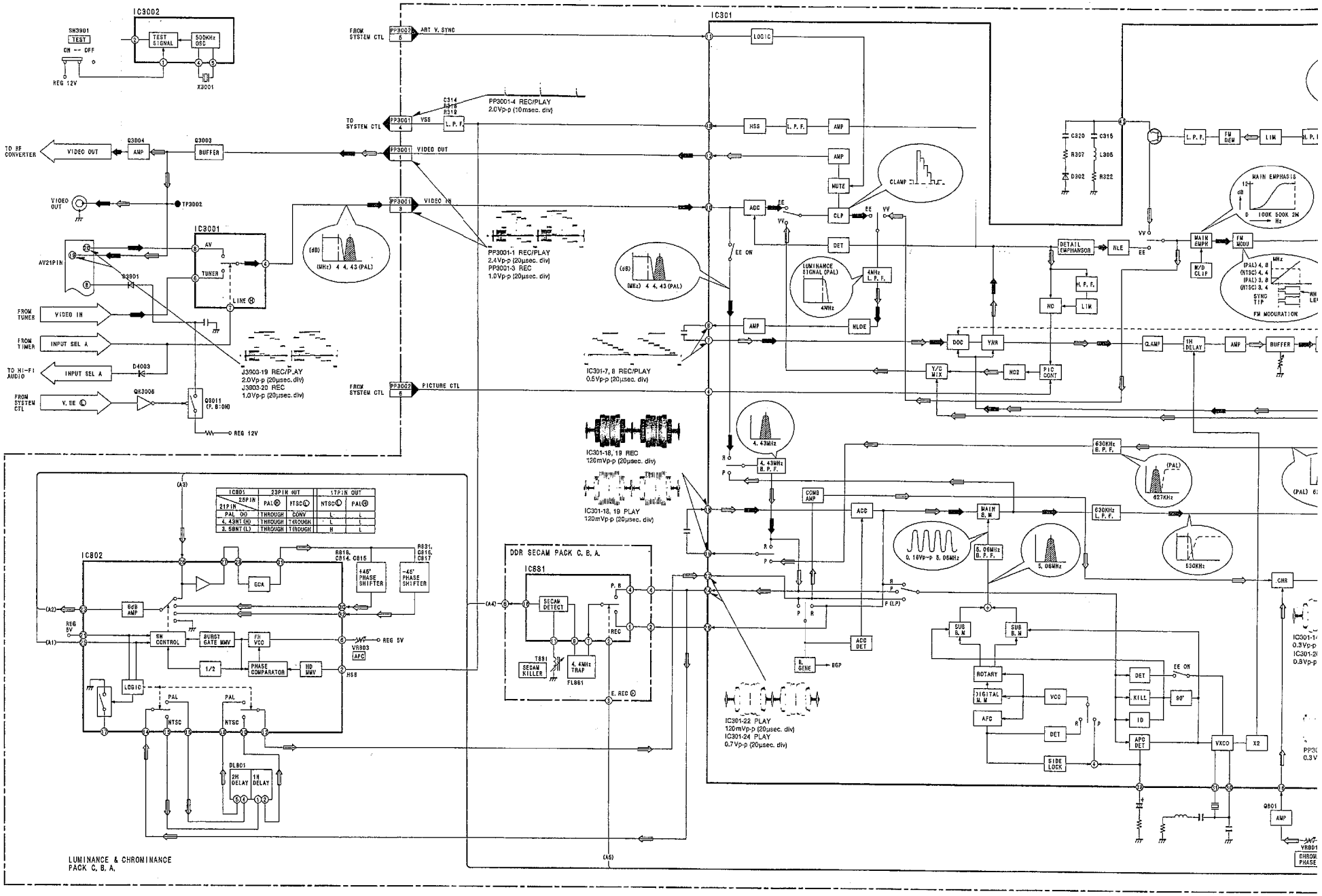

MAIN SIGNAL PATH IN REC MODE

MAIN SIGNAL PATH IN PLAYBACK MODE

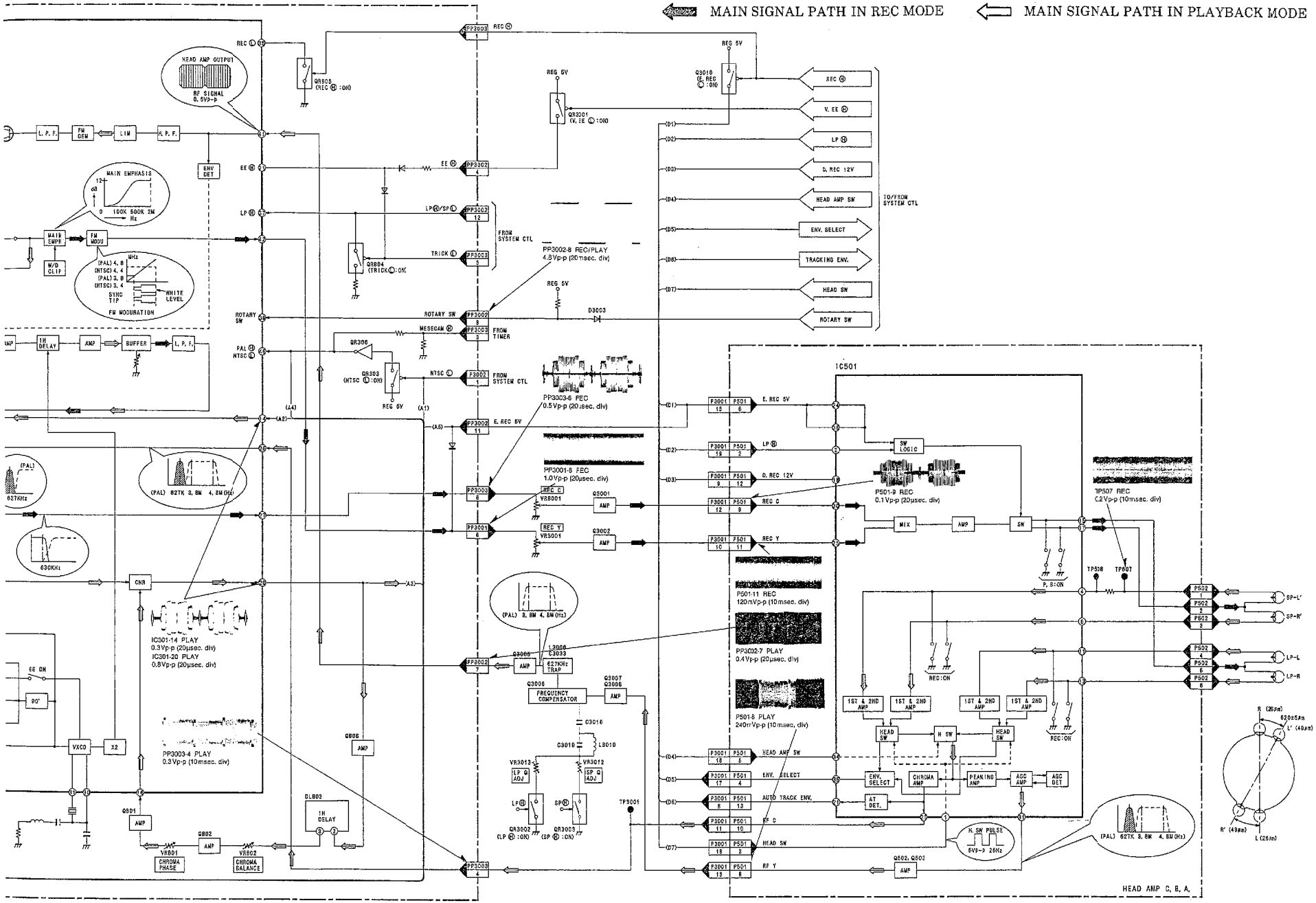

3-5. Hi-Fi AUDIO BLOCK DIAGRAM

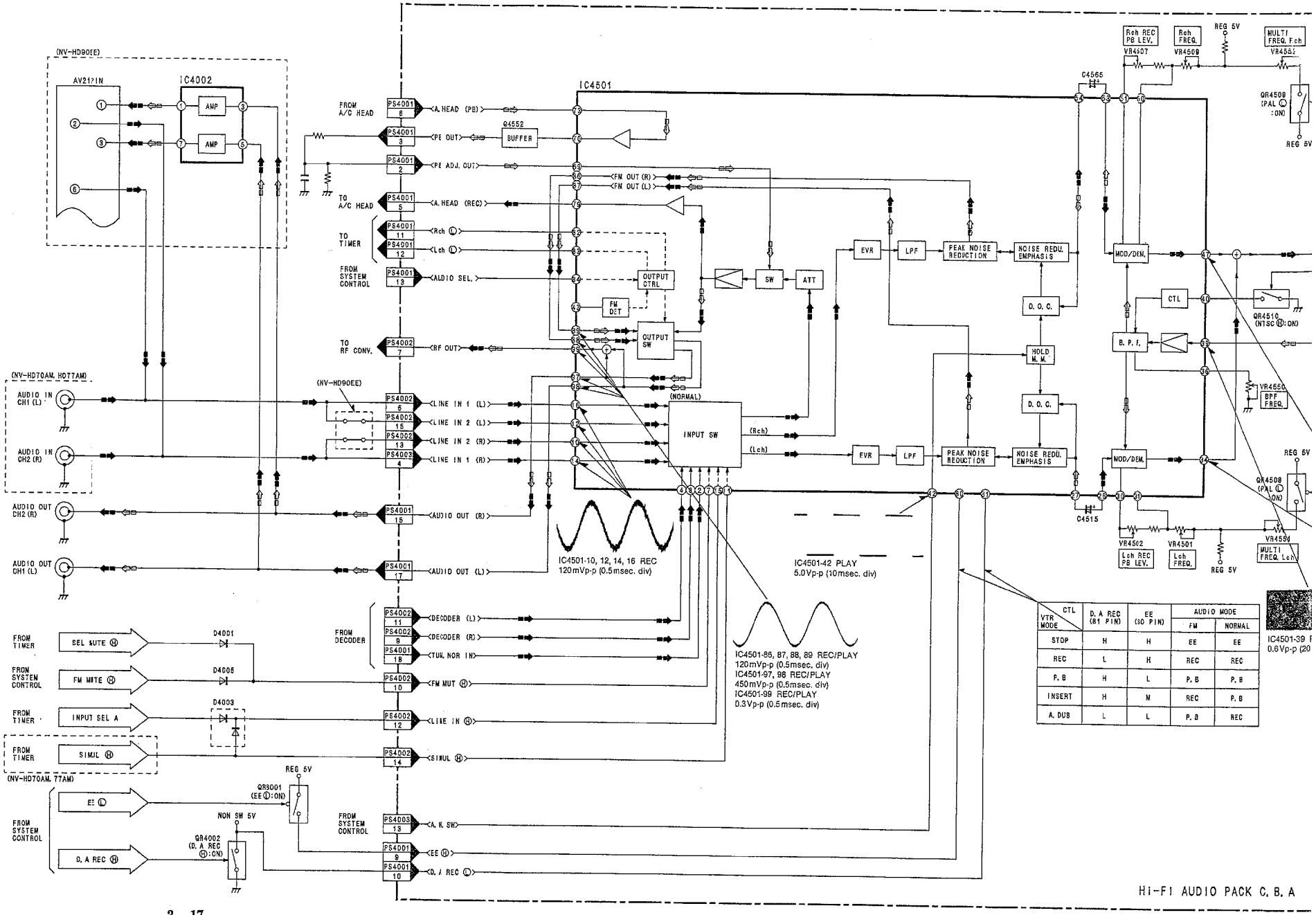

VTR MODE \ CTL	D. A REC (81 PIN)	EE (30 PIN)	AUDIO MODE	
			FM	NORMAL
STOP	H	H	EE	EE
REC	L	H	REC	REC
P. B	H	L	P. B	P. B
INSERT	H	M	REC	P. B
A. DUB	L	L	P. B	REC

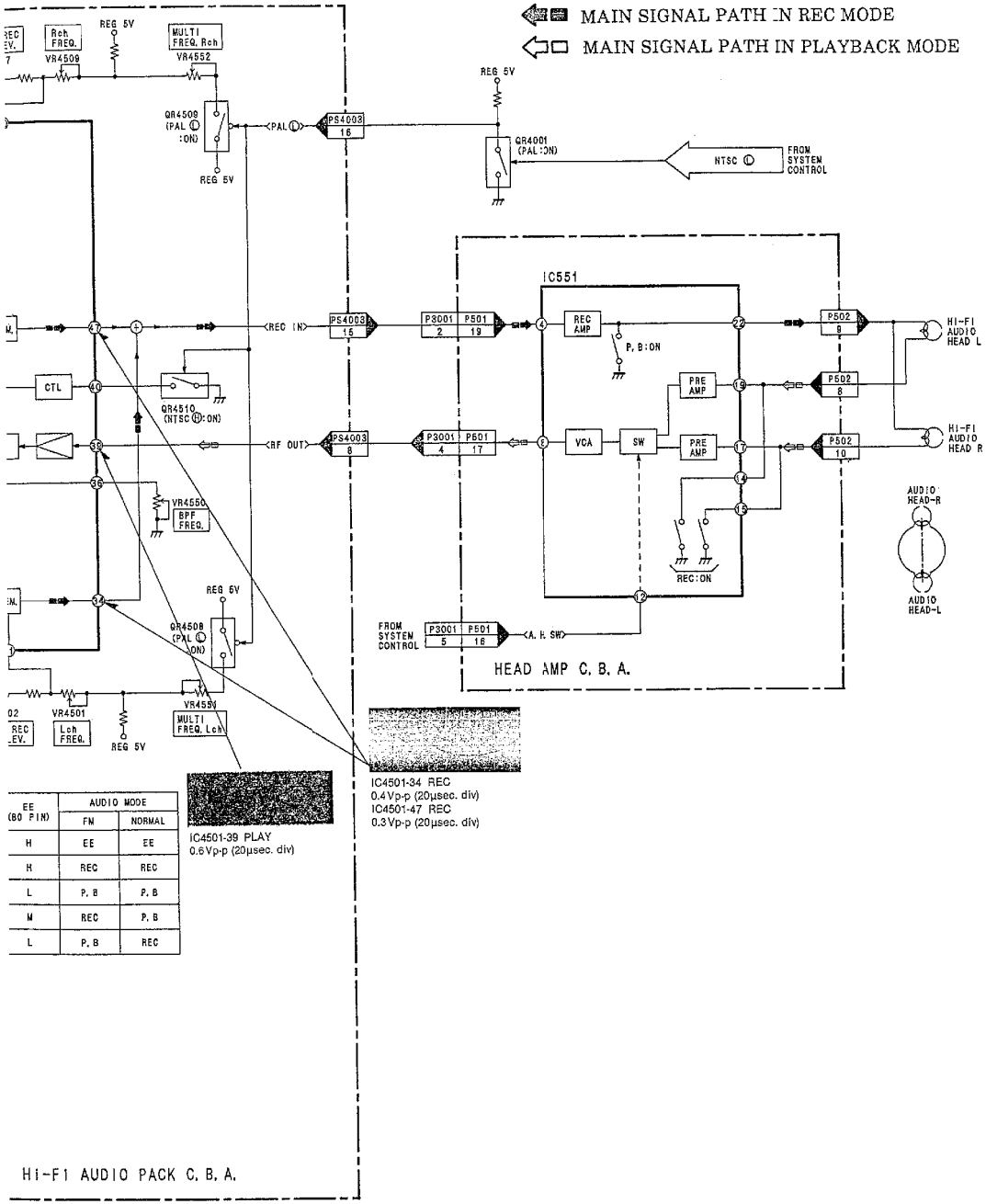

EE (80 PIN)	AUDIO MODE	
	FM	NORMAL
H	EE	EE
H	REC	REC
L	P. B	P. B
M	REC	P. B
L	P. B	REC

IC4501-39 PLAY
0.6Vp-p (20μsec. div)

IC4501-34 REC
0.4Vp-p (20μsec. div)
IC4501-47 REC
0.3Vp-p (20μsec. div)

SYMBOL	TRUTH VALUE TABLE
INVERTER	IN (a) H L OUT (b) L H
COMPARTOR 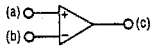	IN (a)/(b) (a)>(b) (a)<(b) OUT (c) H L
AND CIRCUIT	IN (a) L L H H IN (b) L H L H OUT (c) L L L H
OR CIRCUIT	IN (a) L L H H IN (b) L H L H OUT (c) L H H H
THREE STATES BUFFER 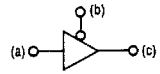	IN (a) H L H or L IN (b) L L H OUT (c) H L ※ ※ High Impedance
TR. SW (NPN TYPE) 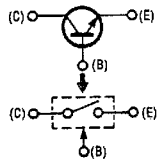	BASE H L TR. SW ON OFF
TR. SW (PNP TYPE) 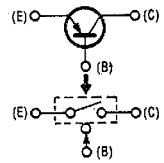	BASE H L TR. SW OFF ON
R·S TYPE FLIP-FLOP 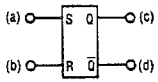	IN (a) L L ⎍ IN (b) L ⎍ L OUT (c) ※ L H OUT (d) ◆ H L ※ Initial condition is maintained. ◆ Initial condition is reversed.

SECTION 4
SCHEMATIC DIAGRAMS

4-1 POWER SCHEMATIC DIAGRAM

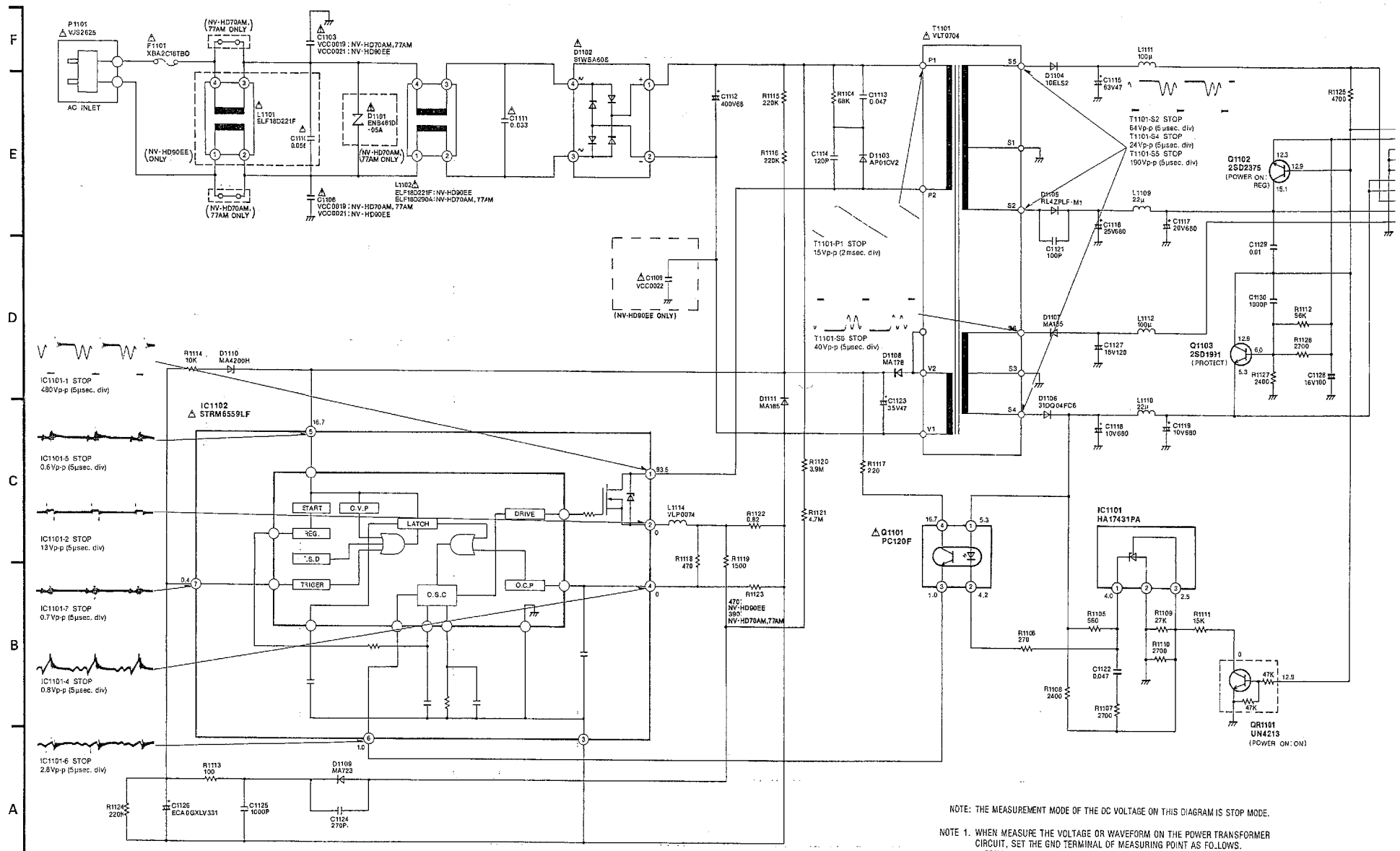

IMPORTANT SAFETY NOTICE:
COMPONENTS IDENTIFIED WITH THE MARK ⚠ HAVE THE SPECIAL CHARACTERISTICS FOR SAFETY.
WHEN REPLACING ANY OF THESE COMPONENTS, USE ONLY THE SAME TYPE.

NOTE: THE MEASUREMENT MODE OF THE DC VOLTAGE ON THIS DIAGRAM IS STOP MODE.

NOTE 1. WHEN MEASURE THE VOLTAGE OR WAVEFORM ON THE POWER TRANSFORMER CIRCUIT, SET THE GND TERMINAL OF MEASURING POINT AS FOLLOWS.
PRIMARY SIDE ..... IC1101-(3)
SECONDARY SIDE ... TP GND OF MAIN C.B.A.

NOTE 2. THE DC VOLTAGE INDICATED IN PRIMARY SIDE IS SHOWN THE VOLTAGE WHEN INPUT AC IS 240V.

ON 4
DIAGRAMS
IAGRAM

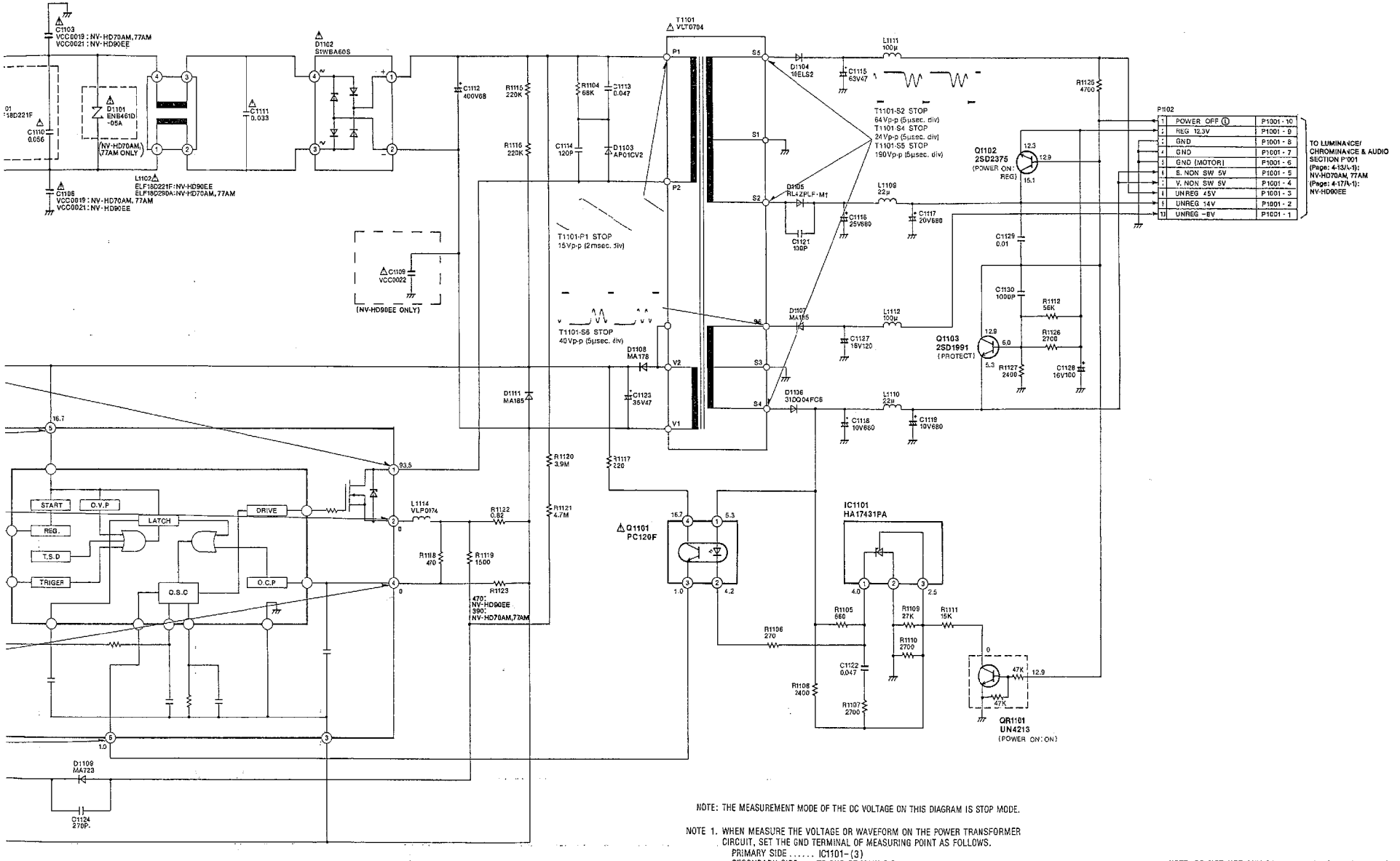

HARACTERISTICS FOR SAFETY.
AE TYPE.

NOTE: THE MEASUREMENT MODE OF THE DC VOLTAGE ON THIS DIAGRAM IS STOP MODE.

NOTE 1. WHEN MEASURE THE VOLTAGE OR WAVEFORM ON THE POWER TRANSFORMER CIRCUIT, SET THE GND TERMINAL OF MEASURING POINT AS FOLLOWS.
PRIMARY SIDE ..... IC1101-(3)
SECONDARY SIDE ... TP GND OF MAIN C.B.A.

NOTE 2. THE DC VOLTAGE INDICATED IN PRIMARY SIDE IS SHOWN THE VOLTAGE WHEN INPUT AC IS 240V.

NOTE: DO NOT USE ANY PART NUMBER SHOWN ON THIS SCHEMATIC DIAGRAM FOR ORDERING. WHEN YOU ORDER A PART, PLEASE REFER TO PARTS LIST.

4-2 POWER C.B.A (VEP01587F: NV-HD70AM, HD77AM) (VEP01587D: NV-HD90EE)

POWER C.B.A.	
Transistor	
Q1101	B-4
Q1102	B-4
Q1103	B-5
Transistor & Resistor	
QR1101	A-5
Integrated Circuit	
IC1101	B-5
IC1102	B-3
Connector	
P1101	B-1
P1102	B-4

ADDRESS INFORMATION

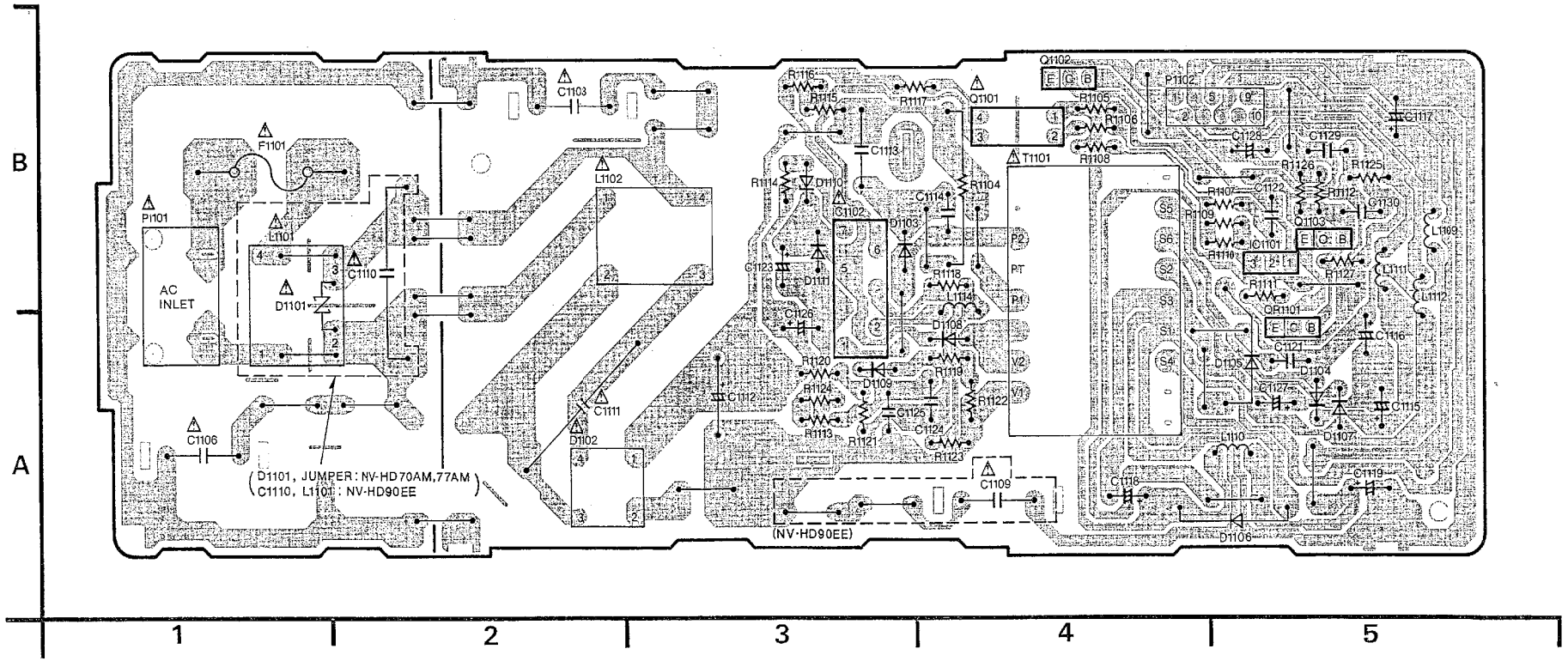

4-3. SYSTEM CONTROL & SERVO SECTION IN MAIN SCHEMATIC DIAGRAM

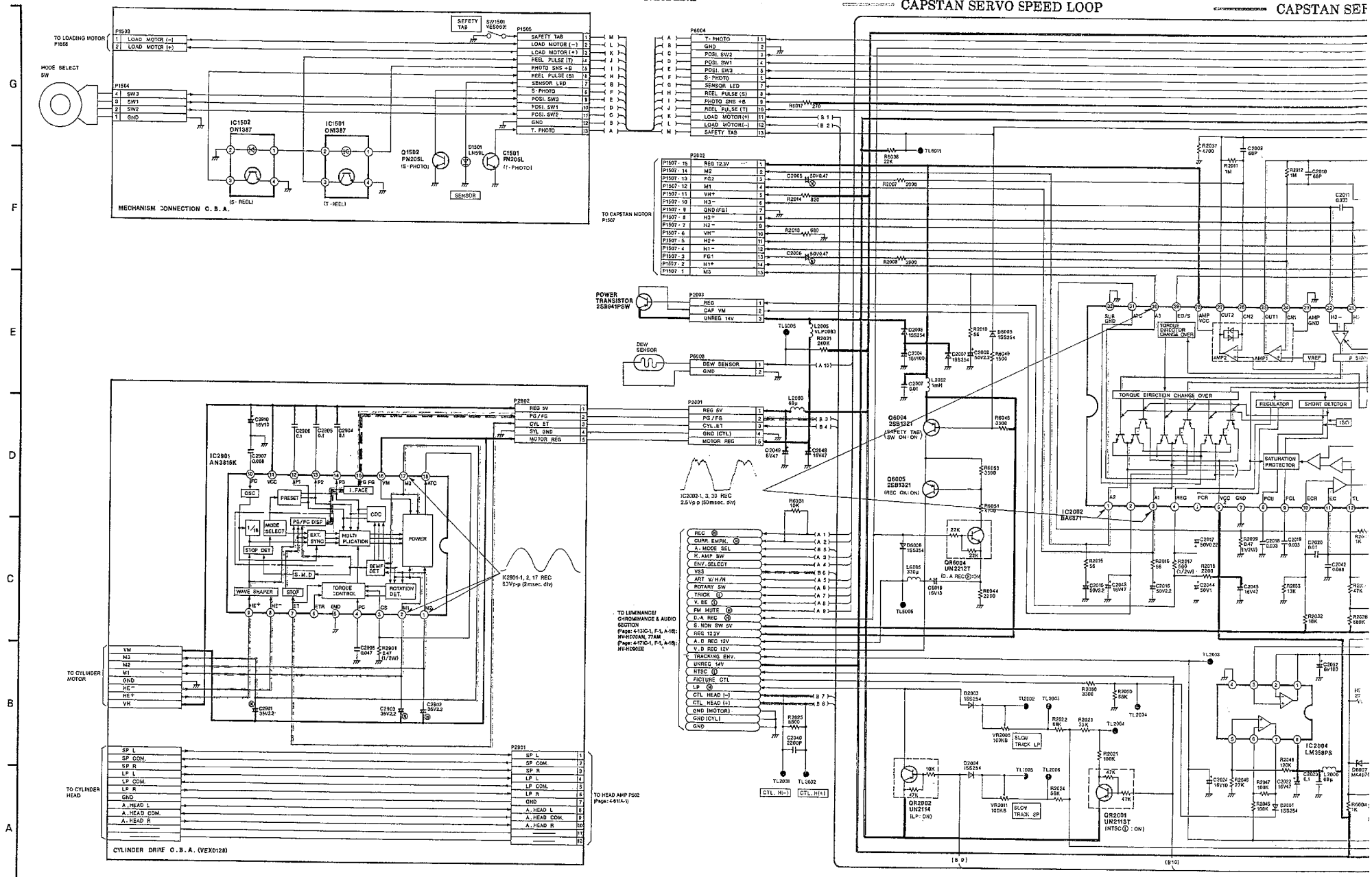

CAPSTAN SERVO PHASE LOOP

CYLINDER SERVO SPEED LOOP

CYLINDER SERVO PHASE LOOP

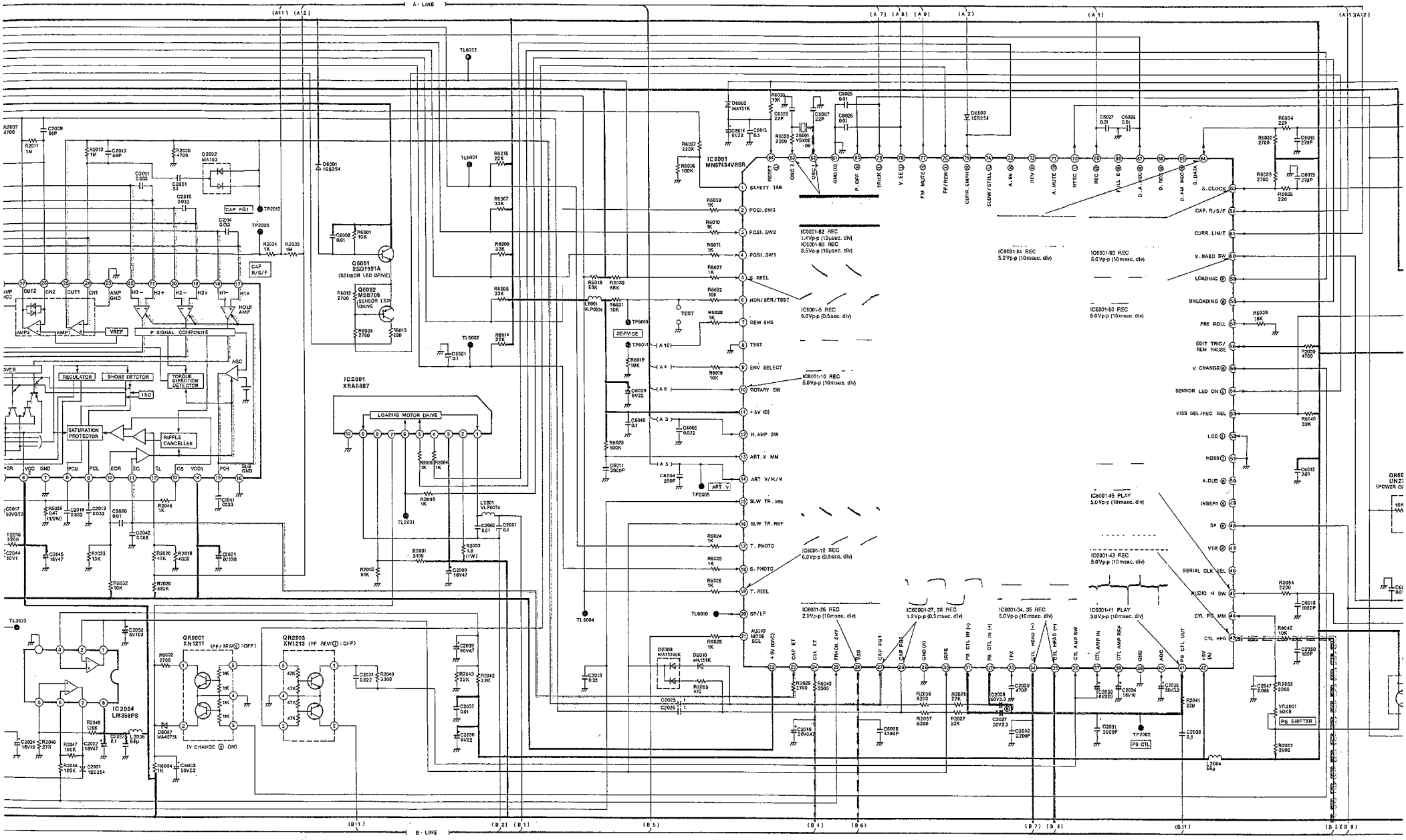

LOOP

CYLINDER SERVO PHASE LOOP

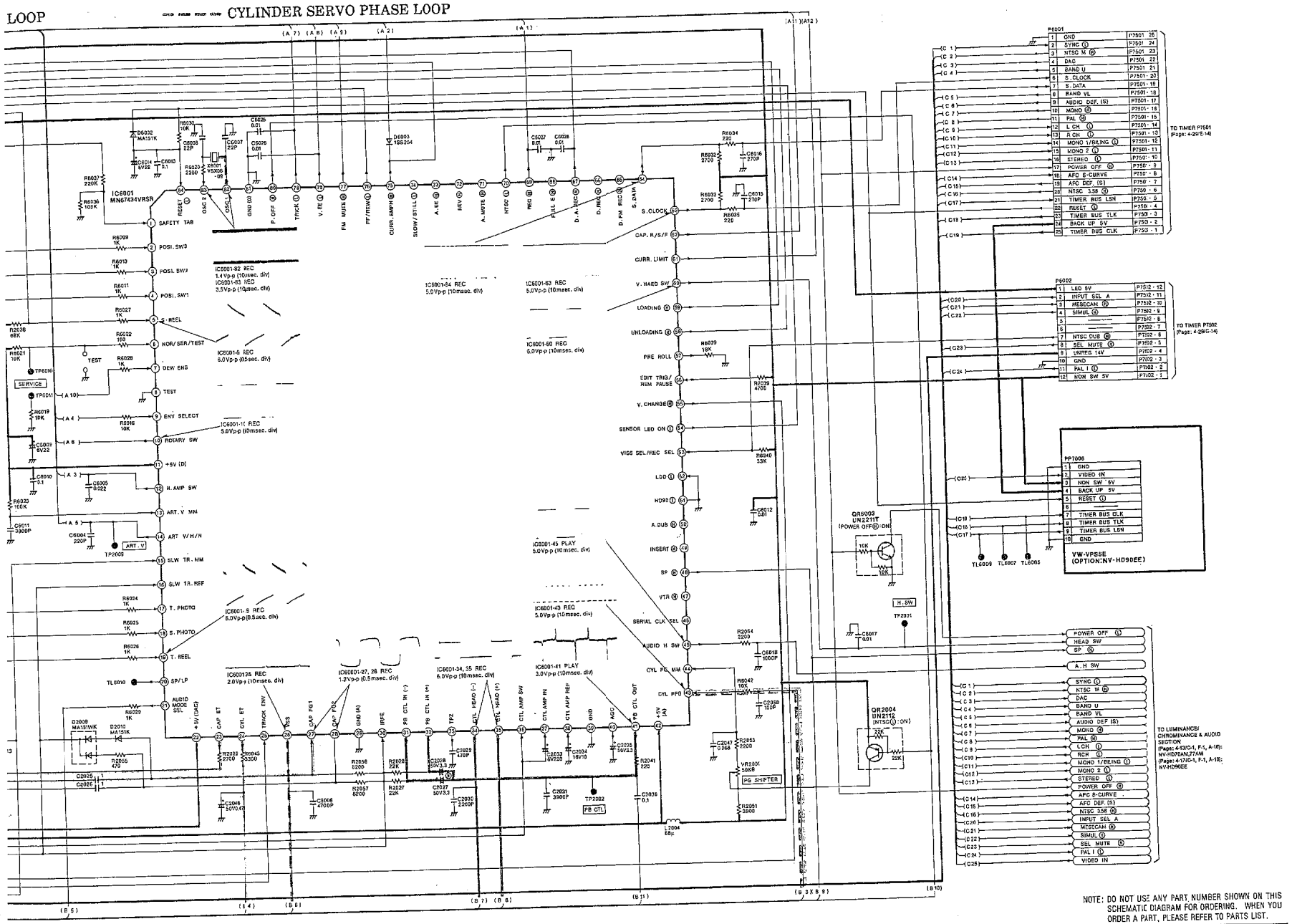

NOTE: DO NOT USE ANY PART NUMBER SHOWN ON THIS SCHEMATIC DIAGRAM FOR ORDERING. WHEN YOU ORDER A PART, PLEASE REFER TO PARTS LIST.

SYSTEM CONTROL & SERVO ICs DC VOLTAGE CHART (SP MODE)

REF. NO.	IC2001																			
MODE	1	2	3	4	5	6	7	8	9	10										
STOP	1.8	15.2	15.2	0	0	0	7.4	9.9	4.7	0										
PLAY	1.6	14.8	14.8	0	0	0	7.4	9.8	0.3	0										
REC	4.2	14.8	14.8	0	0	0	7.4	9.8	2.4	0										
F.F	5.7	14.7	14.9	0	0	0	14.9	9.8	4.2	0										
REW	6.2	14.8	14.8	0	0	0	14.9	9.9	4.4	0										

REF. NO.	IC2002																			
MODE	1	2	3	4	5	6	7	8	9	10	11	12	13	14	15	16	17	18	19	20
STOP	0.5	4.6	0.5	14.4	0.4	15.0	0	4.7	0.8	3.0	0.2	0.4	0.1	5.2	1.4	0	2.3	2.3	2.3	2.3
PLAY	2.9	4.6	2.8	13.8	2.1	14.9	0	1.3	0.8	3.0	2.7	0.5	0.1	5.2	1.4	0	2.3	2.4	2.4	2.4
REC	2.9	4.6	2.8	13.7	2.1	14.9	0	0.6	0.6	3.0	2.7	0.4	0.1	5.2	1.4	0	2.3	2.4	2.4	2.4
F.F	7.3	14.7	7.5	6.4	12.9	14.8	0	0.9	0.7	3.0	2.4	0.5	0.2	5.2	1.4	0	2.4	2.4	2.4	2.4
REW	7.3	14.8	7.3	12.5	12.9	14.9	0	0.6	0.7	3.0	2.7	0.4	0.1	5.2	1.4	0	2.3	2.3	2.3	2.3

REF. NO.	IC2002																			
MODE	21	22	23	24	25	26	27	28	29	30	31	32								
STOP	2.3	2.3	0	5.8	6.0	6.1	6.0	11.8	2.1	0.5	0	0								
PLAY	2.4	2.4	0	3.6	6.0	6.1	6.1	11.8	0.1	2.9	0.1	0								
REC	2.4	2.3	0	6.1	6.0	6.1	6.1	11.8	0	2.9	0.1	0								
F.F	2.4	2.4	0	6.1	6.0	6.1	6.1	11.8	0	6.6	0.1	0								
REW	2.3	2.3	0	6.1	6.0	6.1	6.1	11.8	5.2	7.8	0.1	0								

REF. NO.	IC2004																			
MODE	1	2	3	4	5	6	7	8												
STOP	2.6	2.6	2.6	0	2.7	2.8	3.8	12.2												
PLAY	2.6	2.6	2.6	0	2.7	2.8	2.2	12.2												
REC	2.6	2.6	2.6	0	2.8	2.8	4.7	12.1												
F.F	2.6	2.6	2.6	0	2.8	2.8	3.5	12.2												
REW	2.6	2.6	2.6	0	2.8	2.8	2.6	12.2												

REF. NO.	IC2901																			
MODE	1	2	3	4	5	6	7	8	9	10	11	12	13	14	15	16	17	18		
STOP	14.3	14.3	0.1	1.1	0	2.5	2.5	2.6	2.5	2.7	5.1	3.8	3.8	3.8	1.3	15.0	14.3	0.1		
PLAY	14.5	15.1	0.1	1.1	0	2.6	2.5	2.6	2.5	2.7	5.1	3.8	3.7	3.9	1.4	14.9	14.6	0.1		
REC	14.9	14.9	0.1	1.0	0	2.6	2.5	2.6	2.5	2.7	5.1	4.8	3.8	3.8	1.1	14.8	14.5	6.0		
F.F	14.8	15.1	0.1	1.1	0	0	2.5	2.6	2.5	2.7	5.1	3.8	3.7	3.9	1.1	14.8	15.0	0.1		
REW	14.6	14.5	0.1	1.1	0	2.6	2.5	2.6	2.5	2.7	5.1	3.8	3.7	3.8	1.1	14.8	14.9	0.1		

REF. NO.	IC6001																			
MODE	1	2	3	4	5	6	7	8	9	10	11	12	13	14	15	16	17	18	19	20
STOP	0.4	4.8	0	0	0.1	5.1	0	0	3.7	4.9	5.2	0	0	0	0	2.6	4.9	5.0	4.8	0
PLAY	0.5	5.0	0	0	4.5	5.1	0	0	3.8	5.2	5.2	0	0	0	0	2.6	4.8	4.9	4.4	0
REC	0	5.1	0	0	0.1	5.1	0	0	4.3	5.1	5.2	0	0	0	0	2.6	5.1	5.1	5.1	0
F.F	0.4	4.9	4.6	0	1.7	4.8	0	0	3.6	5.2	5.2	0	0	0	0	2.6	4.8	4.8	1.8	0
REW	0.6	4.4	4.6	0	1.8	4.9	0	0	2.9	3.8	5.2	0	0	0	0	2.6	4.7	4.7	2.4	0

REF. NO.	IC6001																			
MODE	21	22	23	24	25	26	27	28	29	30	31	32	33	34	35	36	37	38	39	40
STOP	5.2	5.2	0.2	2.5	1.9	2.9	2.8	2.6	0	2.6	2.4	2.7	5.0	0	0	0	2.6	2.6	0	2.6
PLAY	5.2	5.2	2.7	2.5	3.3	2.6	2.6	2.6	0	2.6	2.5	2.7	2.8	0	0	0	2.6	2.6	0	2.9
REC	5.2	5.2	2.7	2.5	0.8	2.5	2.5	2.5	0	2.6	2.4	2.7	5.1	3.7	3.8	0	2.6	2.5	0	2.5
F.F	5.2	5.2	2.7	2.5	2.6	2.8	2.7	2.7	0	2.6	2.5	2.7	4.8	0	0	0	2.6	2.6	0	3.1
REW	5.2	5.2	2.7	2.5	1.4	2.6	2.6	2.6	0	2.6	2.5	2.7	4.8	0	0	0	2.5	2.5	0	3.1

REF. NO.	IC6001																			
MODE	41	42	43	44	45	46	47	48	49	50	51	52	53	54	55	56	57	58	59	60
STOP	2.5	5.1	1.6	3.3	0	4.4	0	5.1	0	0	0	0	4.8	5.2	5.1	5.1	0.3	0	0	4.1
PLAY	2.6	5.1	1.3	3.6	3.8	3.8	0	5.1	0	0	0	0	4.7	0.1	5.1	5.1	0.5	0	0	5.2
REC	2.6	5.1	1.2	3.7	0	4.6	0	5.1	0	0	0	0	5.1	0	5.1	5.2	0	0	0	5.2
F.F	2.6	5.1	1.3	3.2	0	4.5	0	5.1	0	0	0	0	4.4	0.1	0	5.0	0.7	0	0	5.2
REW	2.6	5.1	2.0	3.1	0	4.7	0	5.1	0	0	0	0	4.2	0.1	0	5.0	0.7	0	0	4.4

REF. NO.	IC6001																			
MODE	61	62	63	64	65	66	67	68	69	70	71	72	73	74	75	76	77	78	79	80
STOP	5.1	2.1	4.6	4.4	0	0	0	0	0.1	5.1	0	5.2	5.2	0	0	5.1	0	0	5.1	0.1
PLAY	5.1	0	4.5	4.5	0	0	0	0	0.1	5.1	0	0	0	0	0	5.0	0	4.8	5.1	0.1
REC	5.1	0	4.6	4.7	5.2	5.2	5.1	5.2	5.2	5.1	0	0	5.2	0	0	5.1	0	0	5.1	0.1
F.F	5.1	1.7	4.7	4.7	0	0	0	0	0.1	5.2	0	0	5.2	0	0	0	0	0	5.2	0.1
REW	5.1	5.2	4.6	4.5	0	0	0	0	0.1	5.2	0	5.2	5.2	0	0	0	0	1.0	5.2	0.1

REF. NO.	IC6001																			
MODE	81	82	83	84																
STOP	0	2.5	2.6	4.8																
PLAY	0	2.3	2.6	4.8																
REC	0	2.4	2.6	4.9																
F.F	0	2.4	2.6	4.8																
REW	0	2.4	2.6	4.8																

SYSTEM CONTROL & SERVO TRANSISTORs DC VOLTAGE CHART (SP MODE)

REF. NO.	Q1503			Q6001			Q6002			Q6004			Q6005					
MODE	E	C	B	E	C	B	E	C	B	E	C	B	E	C	B			
STOP	15.1	4.6	14.5	5.2	15.0	5.7	5.2	0.2	5.2	12.2	12.2	11.5	12.2	0.2	12.2			
PLAY	14.9	4.6	14.2	5.1	14.9	5.7	5.1	5.1	4.4	12.2	12.2	11.4	12.2	0.2	12.2			
REC	14.8	4.6	14.2	5.1	14.8	5.7	5.1	5.1	4.3	12.1	12.0	11.4	12.0	11.8	11.3			
F.F	14.9	14.8	14.1	5.1	14.8	5.7	5.1	5.1	4.3	12.2	12.2	11.4	12.2	0.2	12.1			
REW	14.8	13.4	14.1	5.1	14.8	5.7	5.1	5.0	4.3	12.2	12.2	11.4	12.2	0.2	12.2			
REF. NO.	QR2002			QR2003						QR6001						QR6003		
MODE	E	C	B	1	2	3	4	5		1	2	3	4	5		E	C	B
STOP	5.2	0.3	5.1	0	0	5.1	0	5.1		0	0	5.1	0	5.1		0	12.8	0.1
PLAY	5.2	0.3	5.1	0	0	5.1	0	5.1		0	0	5.1	0	5.1		0	12.8	0.1
REC	5.2	0.3	5.1	0	0	5.1	0	5.1		0	0	5.1	0	5.1		0	12.8	0.1
F.F	5.2	0.3	5.1	0	0.7	0	0	0		14.8	10.6	0	0	0		0	12.8	0.1
REW	5.2	0.3	5.1	0	1.7	0	0	0		14.8	10.4	0	0	0		0	12.8	0.1
REF. NO.	QR6004																	
MODE	E	C	B															
STOP	0	11.7	0															
PLAY	0	12.1	0															
REC	3.6	3.8	5.1															
F.F	0.8	12.1	0															
REW	0	12.1	0															

4-4. LUMINANCE/CHROMINANCE & AUDIO SECTION IN MAIN SCHEMATIC DIAGRAM (NV-HD70AM, HD77AM)

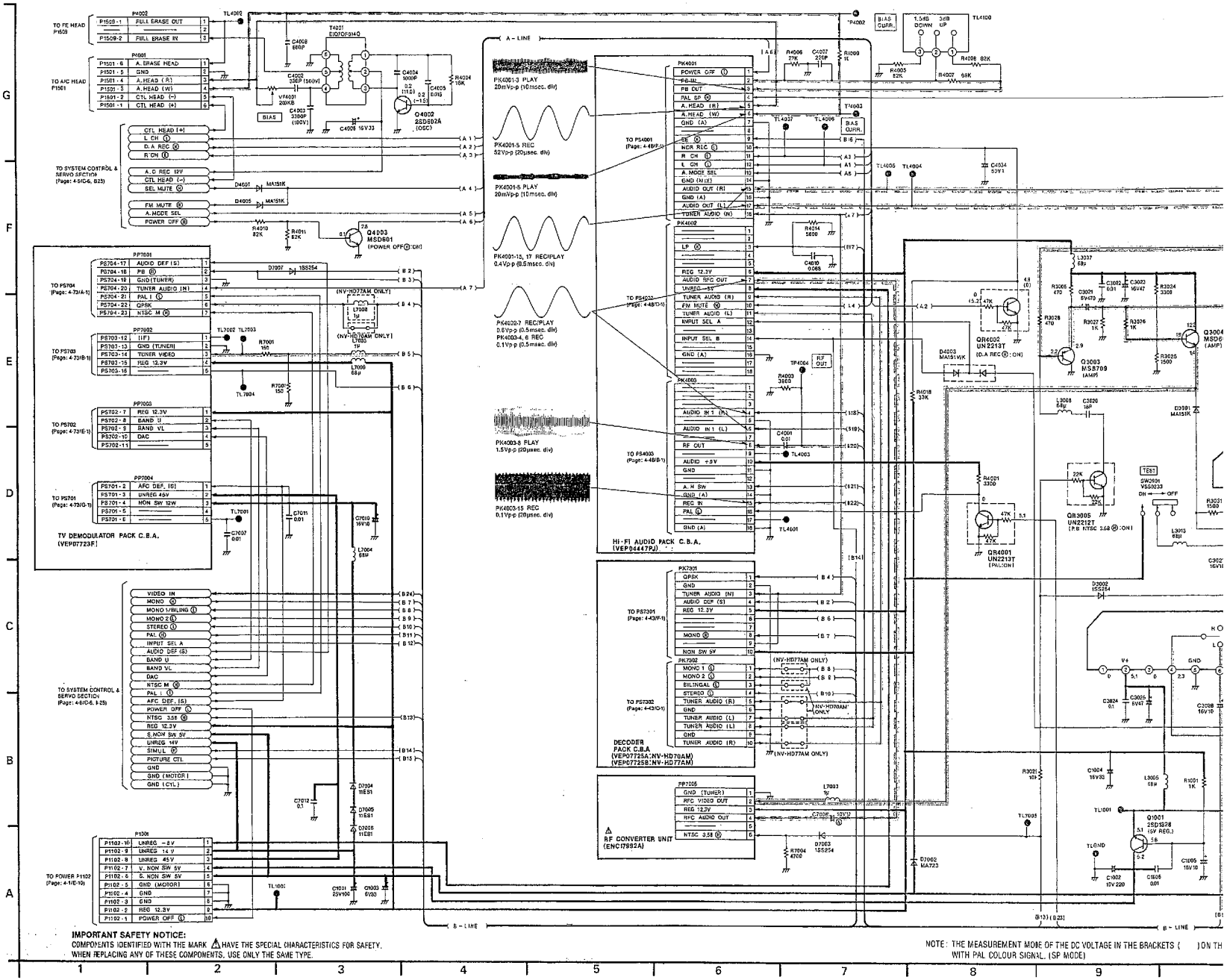

VIDEO MAIN SIGNAL PATH IN REC MODE
VIDEO MAIN SIGNAL PATH IN PLAYBACK MODE
AUDIO MAIN SIGNAL PATH IN REC MODE
AUDIO MAIN SIGNAL PATH IN PLAYBACK MODE

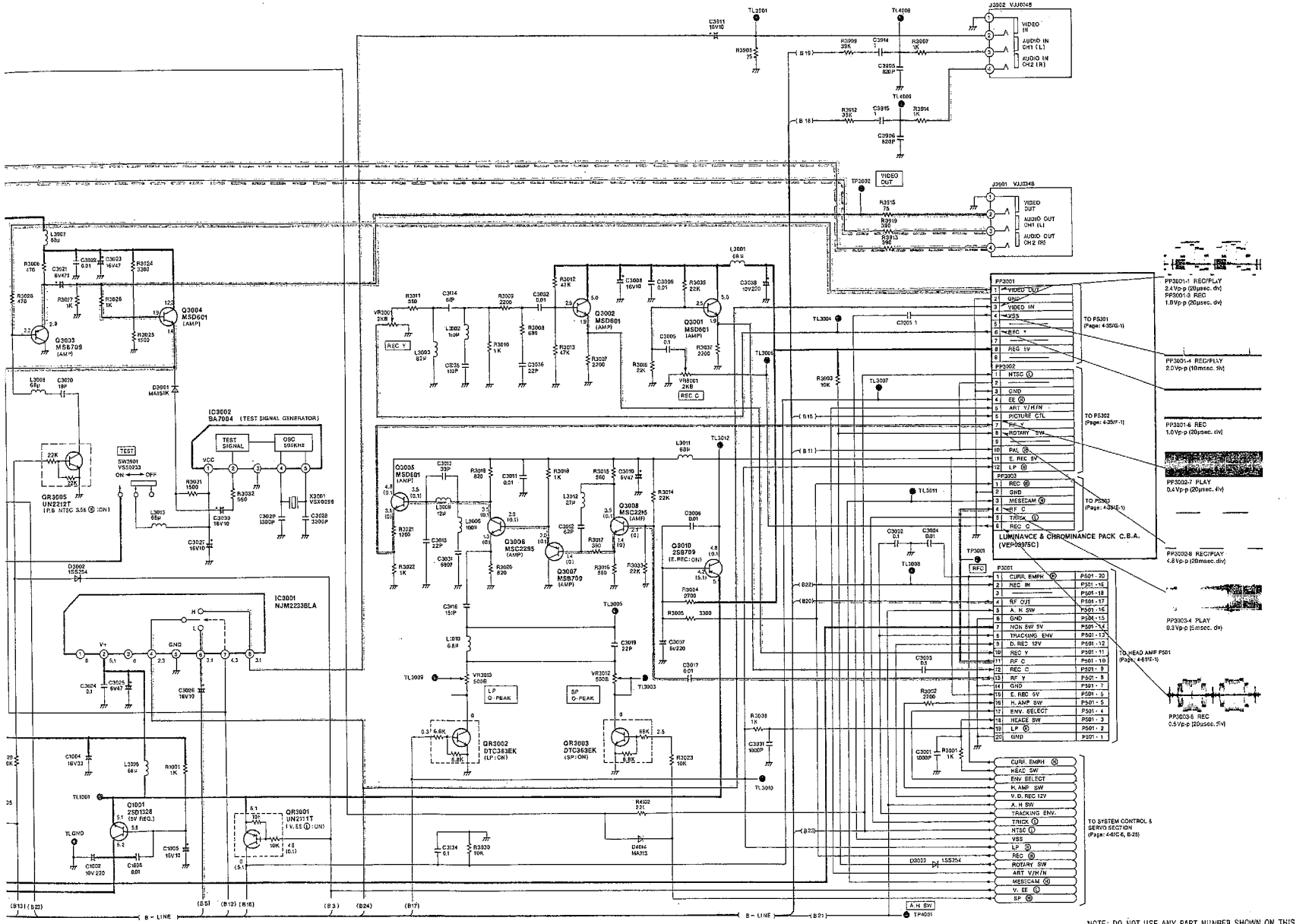

ODE OF THE DC VOLTAGE IN THE BRACKETS ( )ON THIS DIAGRAM IS RECORD MODE NAL. (SP MODE)

THE MEASUREMENT MODE OF THE DC VOLTAGE OUT OF THE BRACKETS ON THIS DIAGRAM IS PLAYBACK MODE WITH PAL COLOUR SIGNAL. (SP MODE)

• LINE IN SIGNAL LEVEL....−10dB 1kHz

NOTE: DO NOT USE ANY PART NUMBER SHOWN ON THIS SCHEMATIC DIAGRAM FOR ORDERING. WHEN YOU ORDER A PART, PLEASE REFER TO PARTS LIST.

9 10 11 12 13 14 15 16 17 18

4-5. LUMINANCE/CHROMINANCE & AUDIO SECTION IN MAIN SCHEMATIC DIAGRAM (NV-HD90EE)

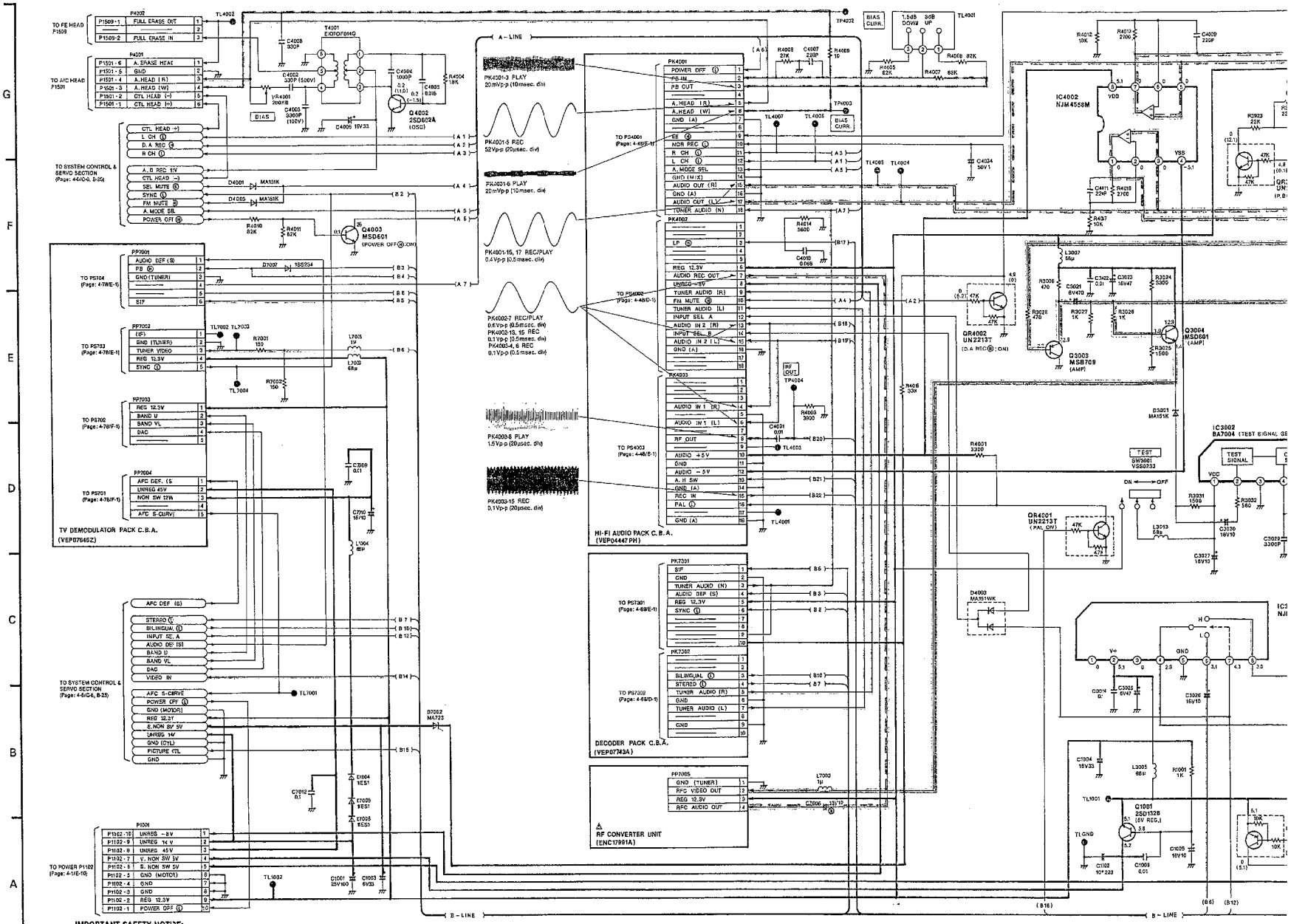

IMPORTANT SAFETY NOTICE:
COMPONENTS IDENTIFIED WITH THE MARK ⚠ HAVE THE SPECIAL CHARACTERISTICS FOR SAFETY.
WHEN REPLACING ANY OF THESE COMPONENTS, USE ONLY THE SAME TYPE.

NOTE: THE MEASUREMENT MODE OF THE DC VOLTAGE IN THE BRACKETS ( ) ON THIS DIAGRAM IS RECORD WITH PAL COLOUR SIGNAL. (SP MODE)

VIDEO MAIN SIGNAL PATH IN REC MODE
VIDEO MAIN SIGNAL PATH IN PLAYBACK MODE
AUDIO MAIN SIGNAL PATH IN REC MODE
AUDIO MAIN SIGNAL PATH IN PLAYBACK MODE

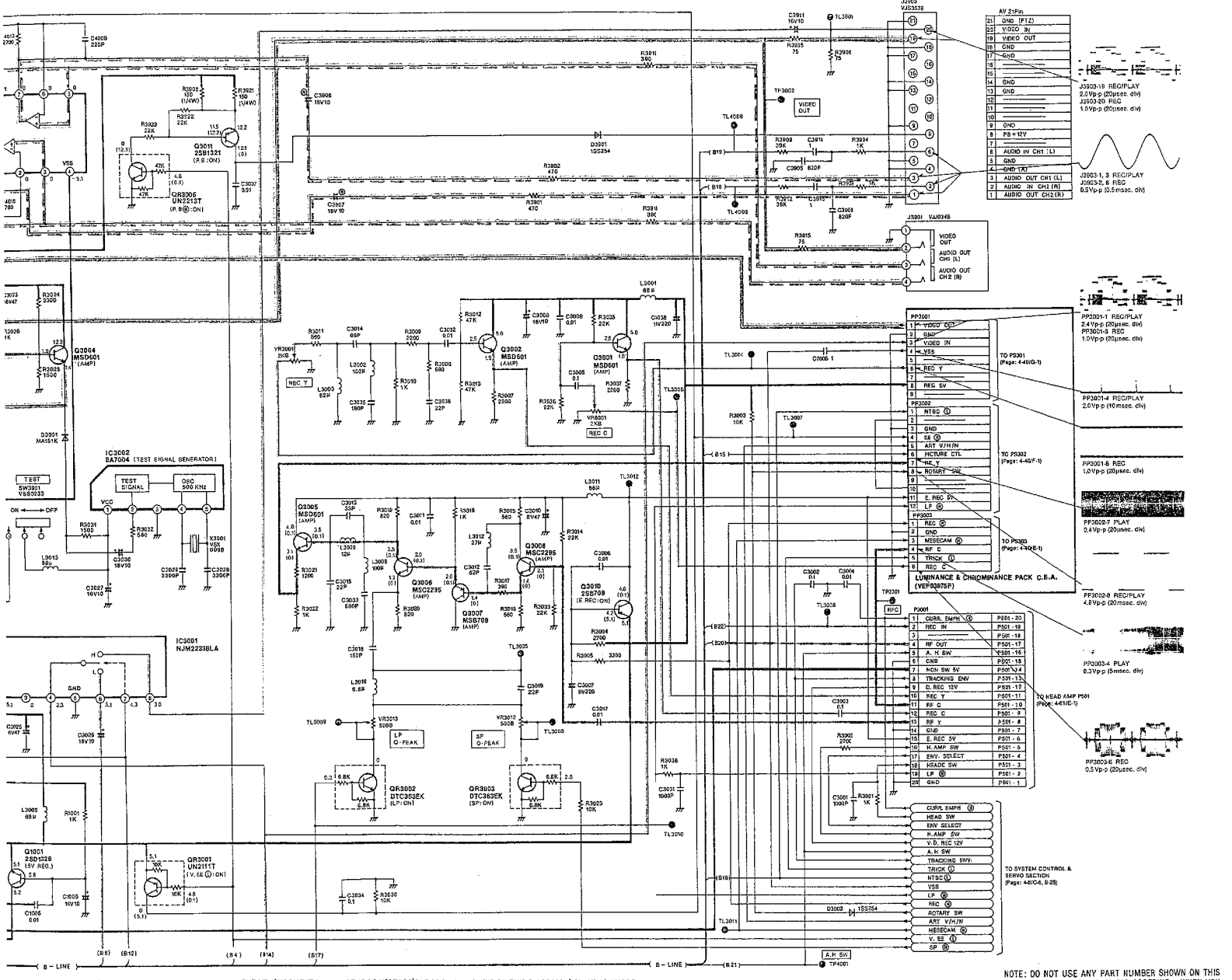

HE BRACKETS ( ) ON THIS DIAGRAM IS RECORD MODE

THE MEASUREMENT MODE OF THE DC VOLTAGE OUT OF THE BRACKETS ON THIS DIAGRAM IS PLAYBACK MODE WITH PAL COLOUR SIGNAL. (SP MODE)

• LINE IN SIGNAL LEVEL... −10dB 1kHz

NOTE: DO NOT USE ANY PART NUMBER SHOWN ON THIS SCHEMATIC DIAGRAM FOR ORDERING. WHEN YOU ORDER A PART, PLEASE REFER TO PARTS LIST.

10 11 12 13 14 15 16 17 18

4-6 MAIN C.B A (VEP03A88J: NV-HD70AM) (VEP03A88L: NV-HD77AM) (VEP03A88H: NV-HD90EE)

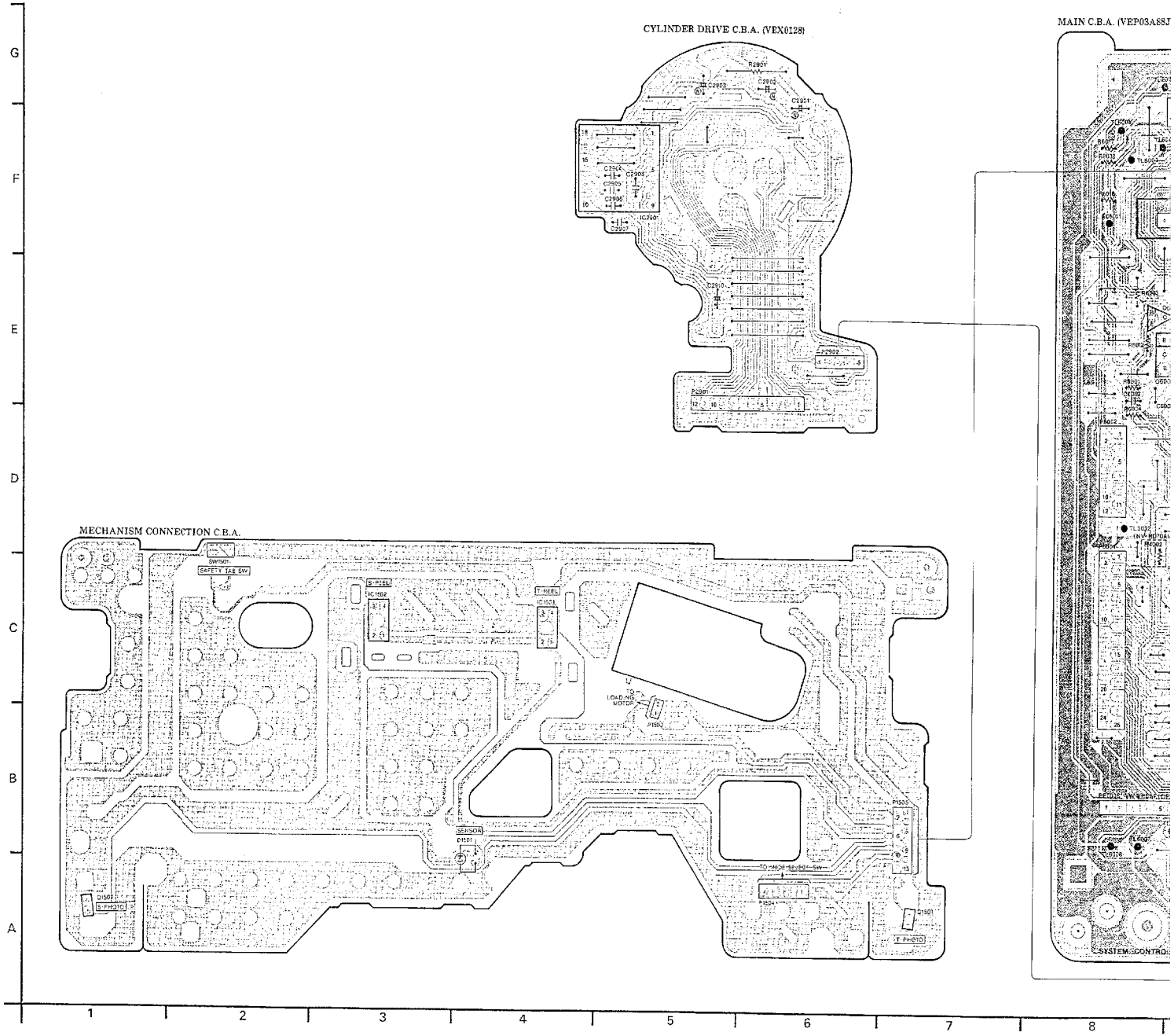

MAIN C.B.A. (VEP03A88J: NV-HD70AM) (VEP03A88L: NV-HD77AM) (VEP03A88H: NV-HD90EE)

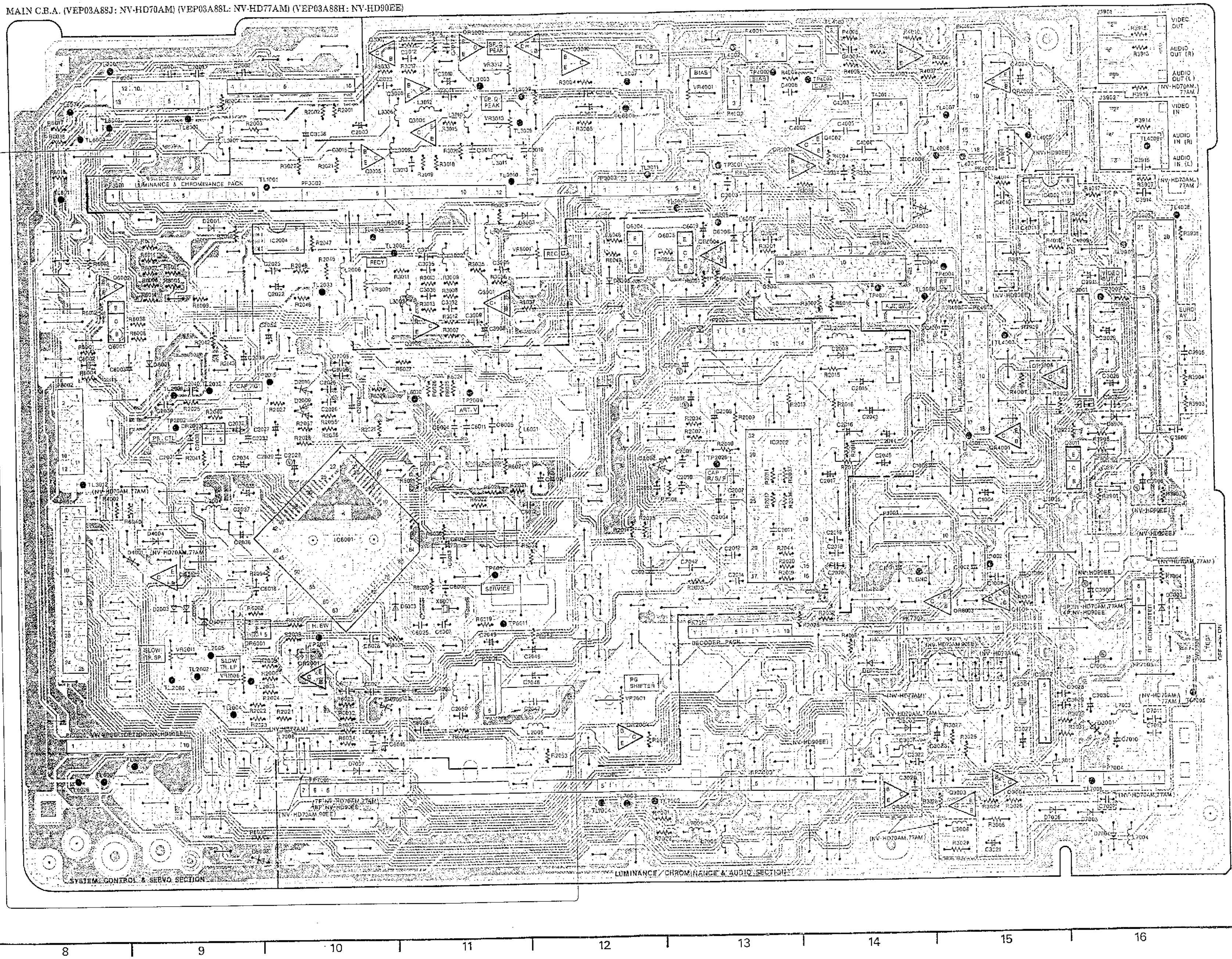

MAIN C.B A ADDRESS INFORMATION

SYSTEM CONTROL & SERVO SECTION	
Transistor	
Q1501	A-7
Q1502	A-1
Q6001	E-8
Q6002	E-8
Q6004	E-12
Q6005	E-13
Transistor & Resistor	
QR2001	B-10
QR2002	C-9
QR2003	D-9
QR2004	B-12
QR6001	C-9
QR6003	C-15
QR6004	E-13
Integrated Circuit	
IC1501	C-4
IC1502	C-3
IC2001	G-10
IC2002	D-13
IC2004	E-10
IC2901	F-5
IC6001	C-10
Test Point	
TP2001	C-10
TP2002	D-9
TP2009	D-11
TP2015	D-10
TP2026	D-13
TP6010	C-11
TP6011	C-11
Adjustment	
VR2001	B-12
VR2006	B-9
VR2011	C-9
Connector	
P1503	B-5
P1504	A-6
P1505	B-7
P2001	B-11
P2002	E-13
P2003	E-14
P2901	E-5
P2902	E-6
P6001	C-8
P6002	D-8
P6003	G-12
P6004	G-9
PP7006	B-8

ADDRESS INFORMATION

LUMINANCE/ CHROMINANCE & AUDIO SECTION	
Transistor	
Q1001	C-15
Q3001	E-11
Q3002	E-11
Q3003	A-15
Q3004	B-15
Q3005	F-10
Q3006	F-11
Q3007	G-10
Q3008	G-11
Q3010	G-12
Q3011	D-16
Q4002	F-14
Q4003	G-14
Transistor & Resistor	
QR3001	F-14
QR3002	G-12
QR3003	G-11
QR3005	A-14
QR3006	D-15
QR4001	D-15
QR4002	F-15
Integrated Circuit	
IC3001	E-16
IC3002	B-15
IC4002	F-15
Test Point	
TP3001	F-13
TP3002	E-16
TP4001	E-14
TP4002	G-13
TP4003	G-14
TP4004	E-15
Adjustment	
VR3001	E-10
VR3012	G-11
VR3013	F-11
VR4001	G-13
VR8001	E-12
Connector	
P1001	C-14
P3001	E-14
P4001	G-13
P4002	F-13
PK4001	G-15
PK4002	F-15
PK4003	E-15
PK7301	C-13
PK7302	C-14
PP3001	F-9
PP3002	F-10
PP3003	F-12
PP7001	B-10
PP7002	B-12
PP7003	B-13
PP7004	B-16
PP7005	C-16

ADDRESS INFORMATION

4-7 TIMER C.B.A. (VEP07752N: NV-HD70AM) (VEP07752Q: NV-HD77AM) (VEP07752M: NV-HD90EE) & OPERATION C B A (VEP06931B)

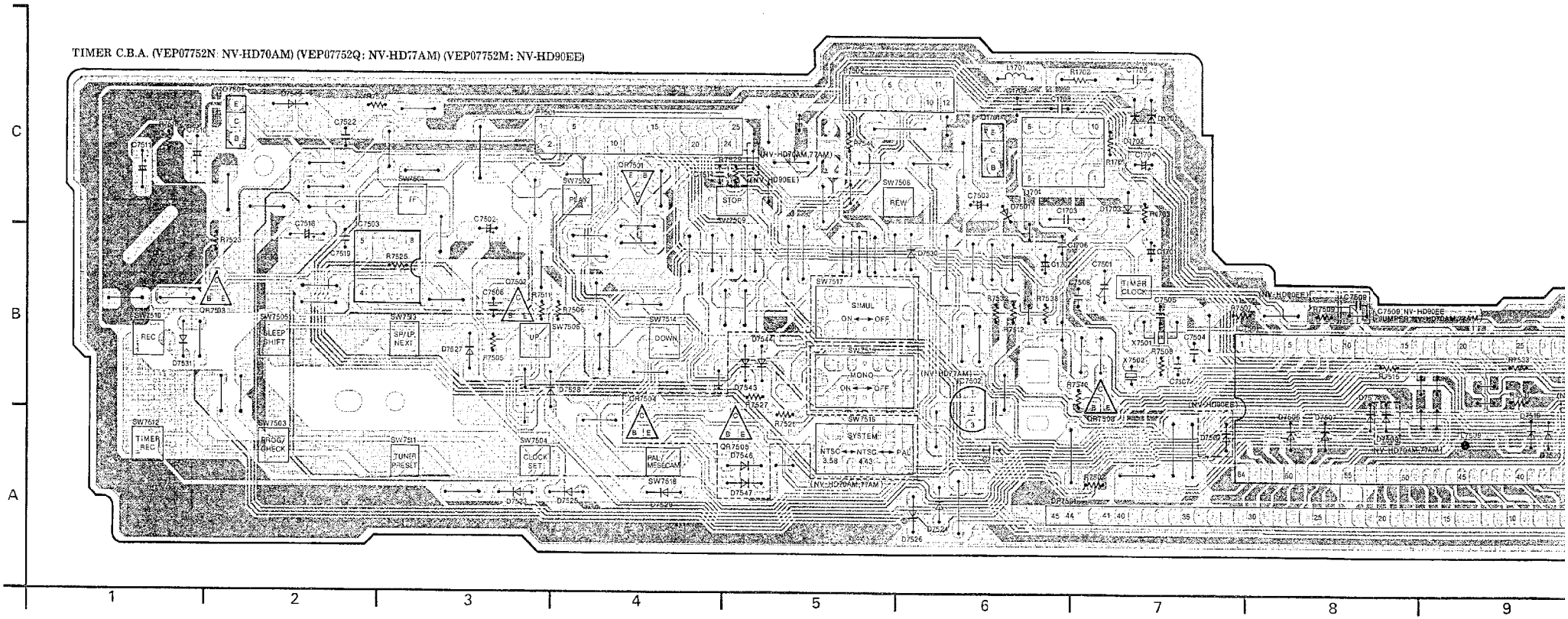

TIMER C.B.A. & OPERATION C.E.A.					
Transistor		QR7504	A-4	**Adjustment**	
Q1701	C-6	QR7505	A-5	C7501	B-7
Q7501	C-2	QR7508	B-7	**Connector**	
Q7502	B-3	**Integrated Circuit**		P7501	C-4
Transistor & Resistor		IC7501	B-8	P7502	C-5
QR7501	C-4	IC7502	B-8	PP7501	B-12
QR7502	B-12	IC7503	B-2	PS6501	B-13
QR7503	B-2	IC7504	B-11		

ADDRESS INFORMATION

OPERATION C.B.A. (VEP06931B)

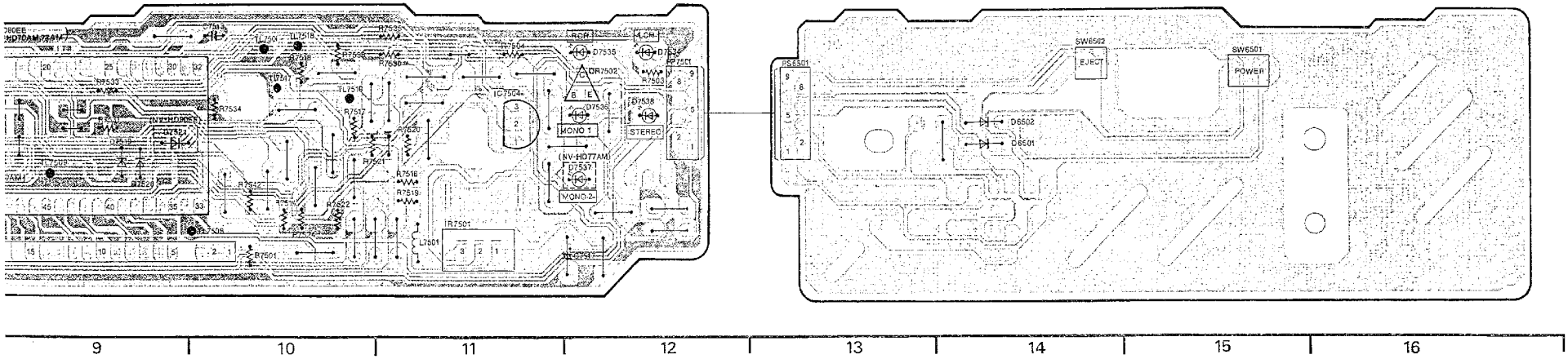

4-8. TIMER & OPERATION SCHEMATIC DIAGRAM

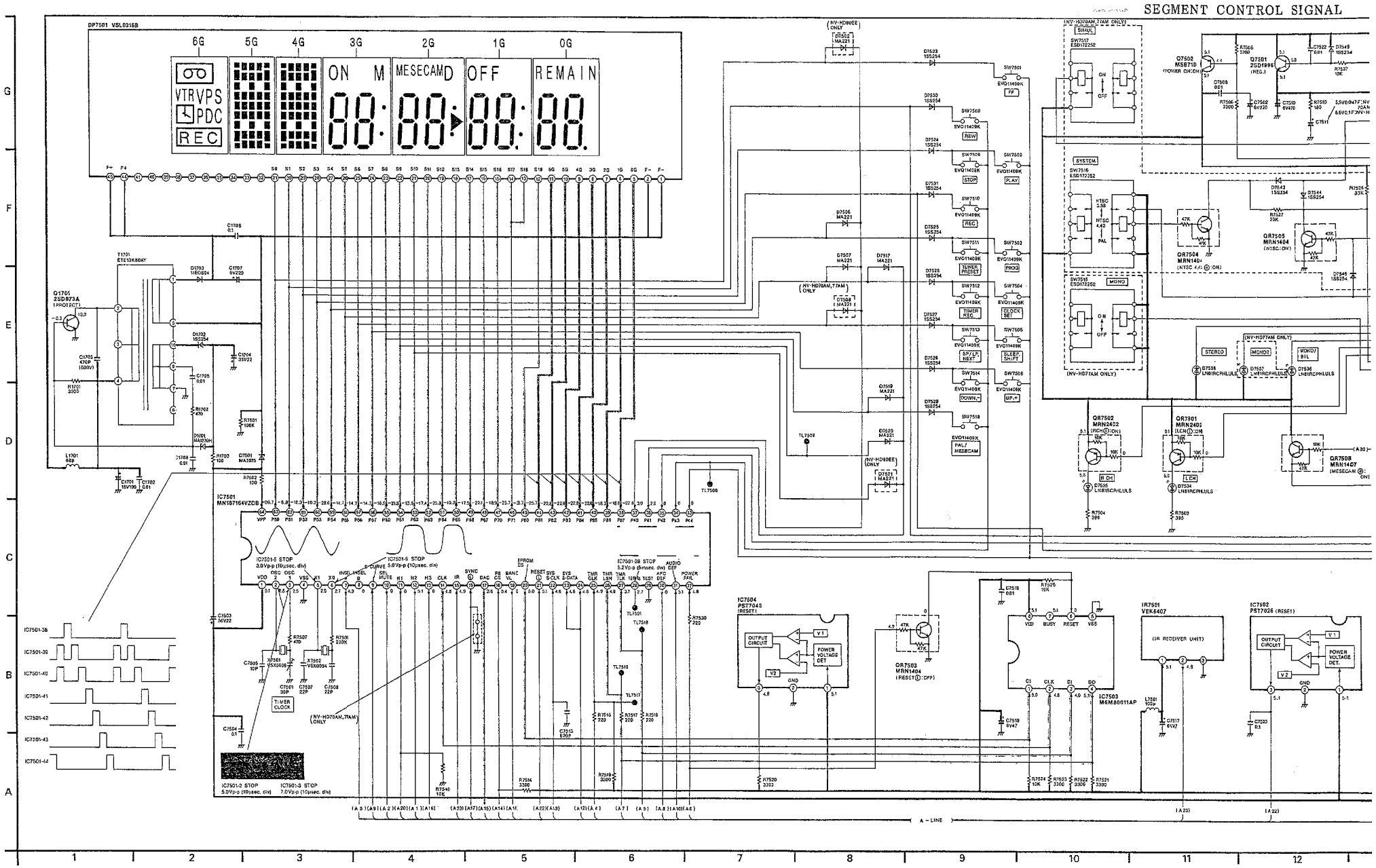

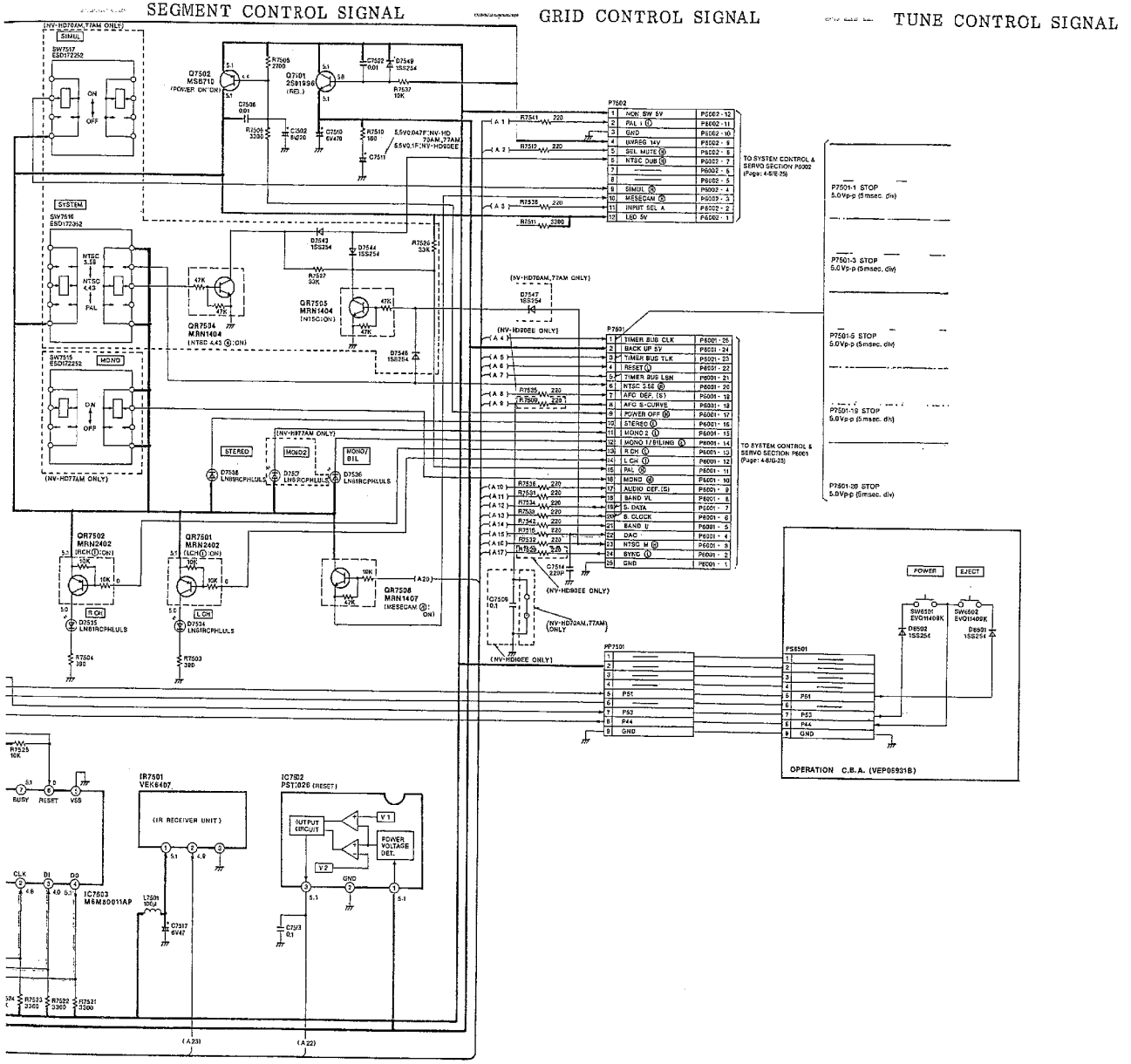

NOTE: THE MEASUREMENT MODE OF THE DC VOLTAGE ON THIS DIAGRAM IS STOP MODE.

NOTE: DO NOT USE ANY PART NUMBER SHOWN ON THIS SCHEMATIC DIAGRAM FOR ORDERING. WHEN YOU ORDER A PART, PLEASE REFER TO PARTS LIST.

10 | 11 | 12 | 13 | 14 | 15 | 16 | 17

4-9 LUMINANCE & CHROMINANCE PACK C.B A (VEP03975C: NV-HD70AM, HD77AM)

LUMINANCE & CHROMINANCE PACK C.B.A. (VEP03975C)

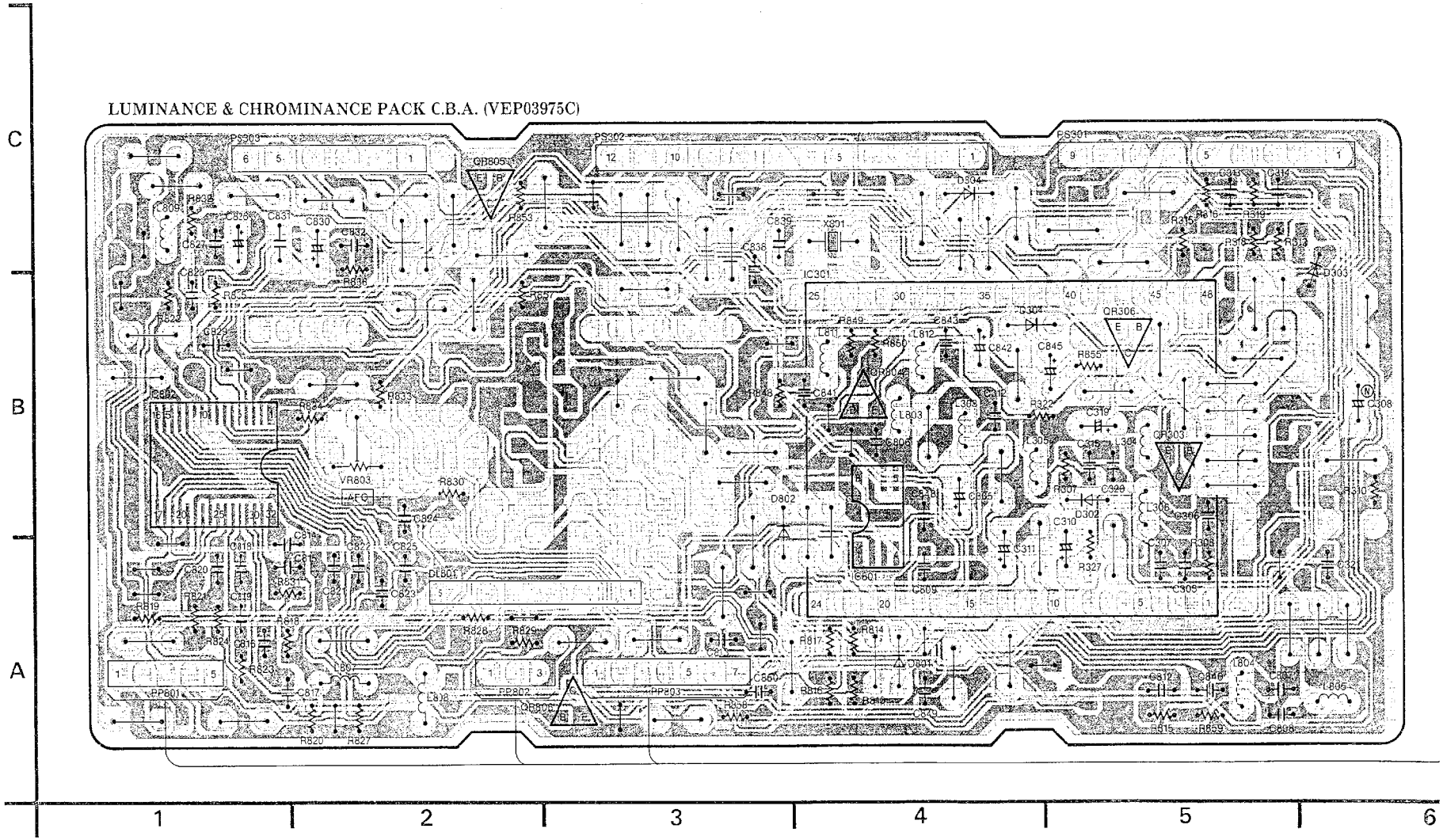

LUMINANCE & CHROMINANCE PACK C.B.A.			
Transistor & Resistor		Adjustment	
QR303	B-5	VR803	B-2
QR306	B-5	Connector	
QR804	B-4	PP801	A-1
QR805	C-2	PP802	A-2
QR806	A-3	PP803	A-3
Integrated Circuit		PS301	C-5
IC301	B-4	PS302	C-3
IC801	A-4	PS303	C-1
IC802	B-1	PS801	A-8
IC8001	A-8	PS802	A-7
		PS803	A-6

ADDRESS INFORMATION

NTSC RECORDING PACK C.B.A. (VEP03888C)

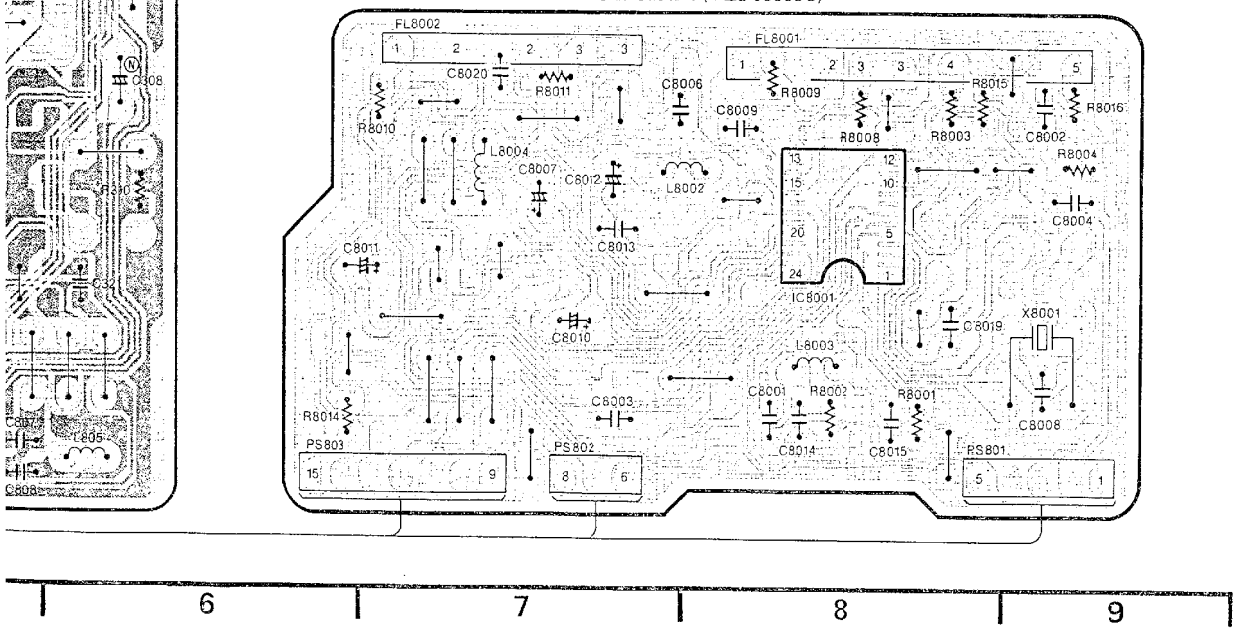

4-10. LUMINANCE & CHROMINANCE PACK SCHEMATIC DIAGRAM (NV-HD70AM, HD77AM)

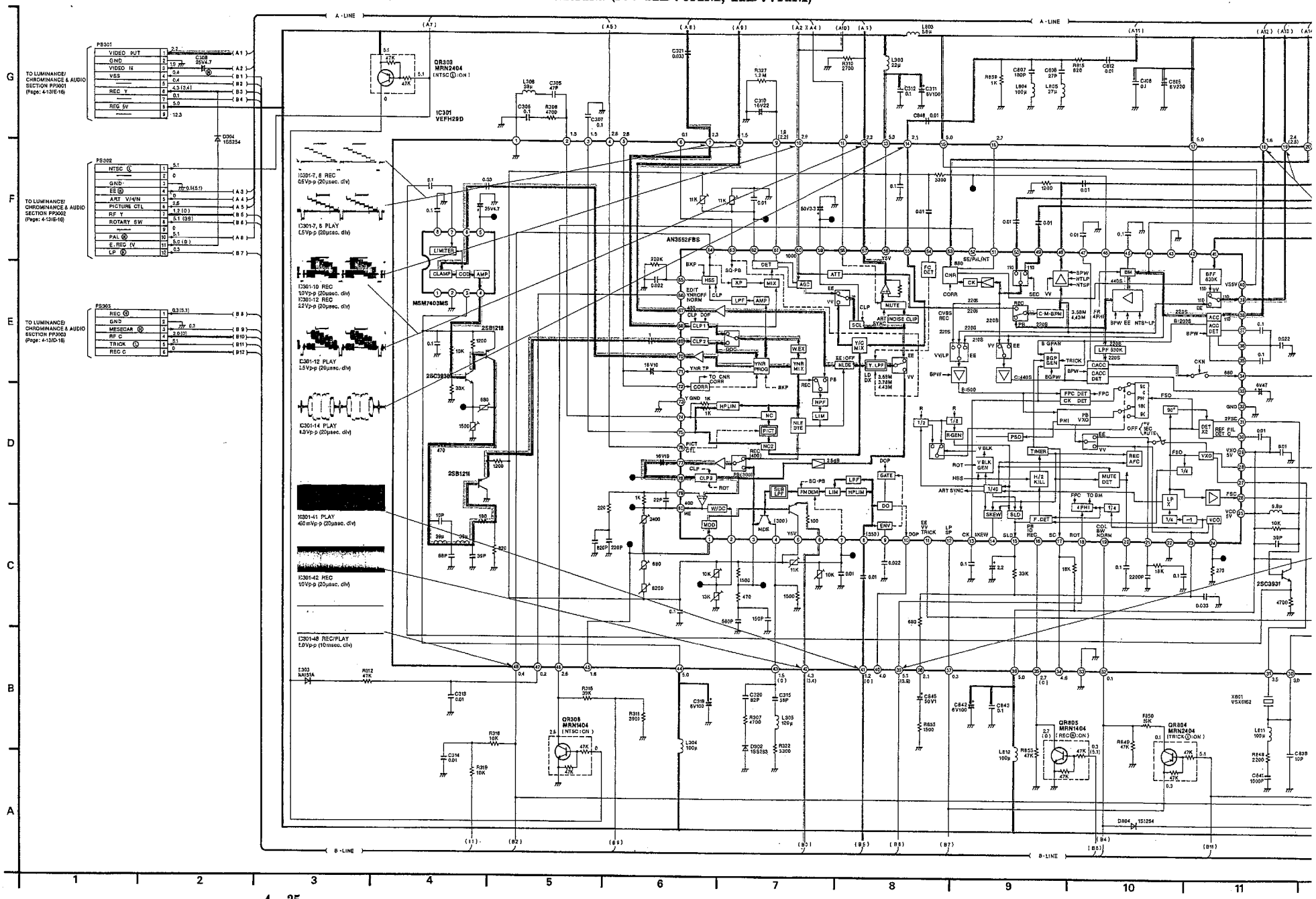

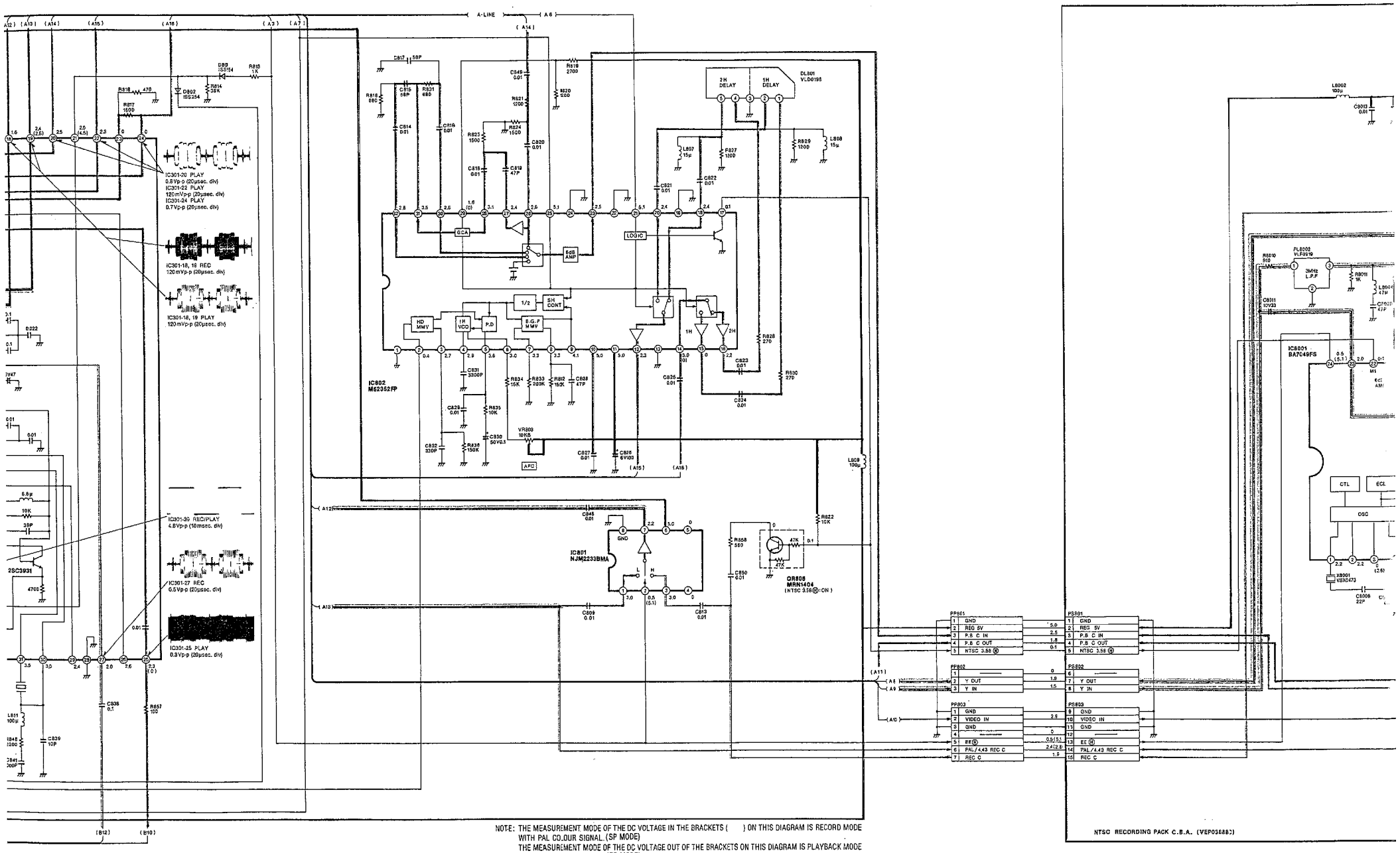

NOTE: THE MEASUREMENT MODE OF THE DC VOLTAGE IN THE BRACKETS ( ) ON THIS DIAGRAM IS RECORD MODE WITH PAL COLOUR SIGNAL. (SP MODE)
THE MEASUREMENT MODE OF THE DC VOLTAGE OUT OF THE BRACKETS ON THIS DIAGRAM IS PLAYBACK MODE WITH PAL COLOUR SIGNAL. (SP MODE)

MAIN SIGNAL PATH IN REC MODE MAIN SIGNAL PATH IN PLAYBACK MODE

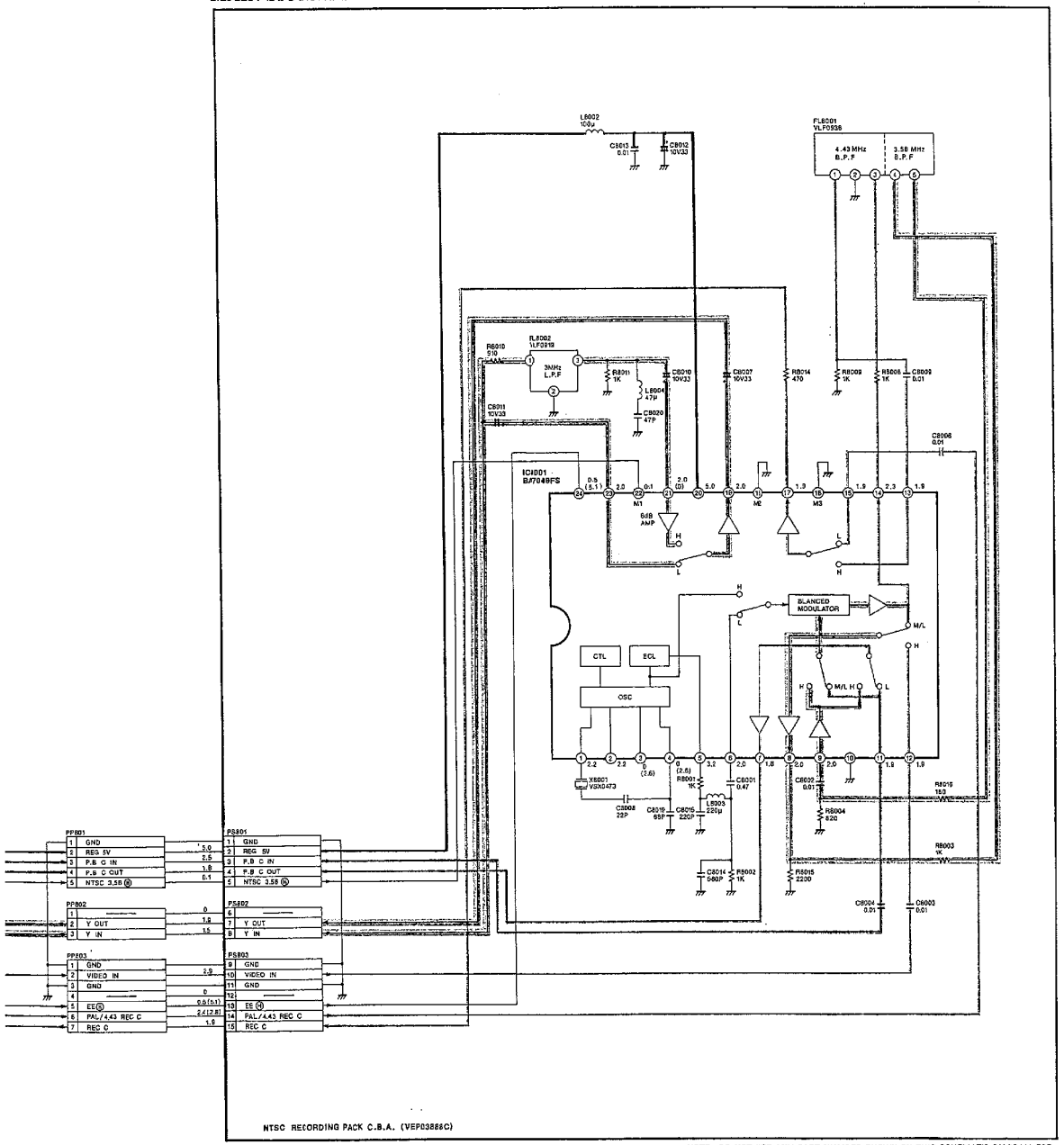

NOTE: DO NOT USE ANY PART NUMBER SHOWN ON THIS SCHEMATIC DIAGRAM FOR ORDERING. WHEN YOU ORDER A PART, PLEASE REFER TO PARTS LIST.

19 | 20 | 21 | 22 | 23 | 24 | 25

4-11. LUMINANCE & CHROMINANCE PACK SCHEMATIC DIAGRAM (NV-HD90EE)

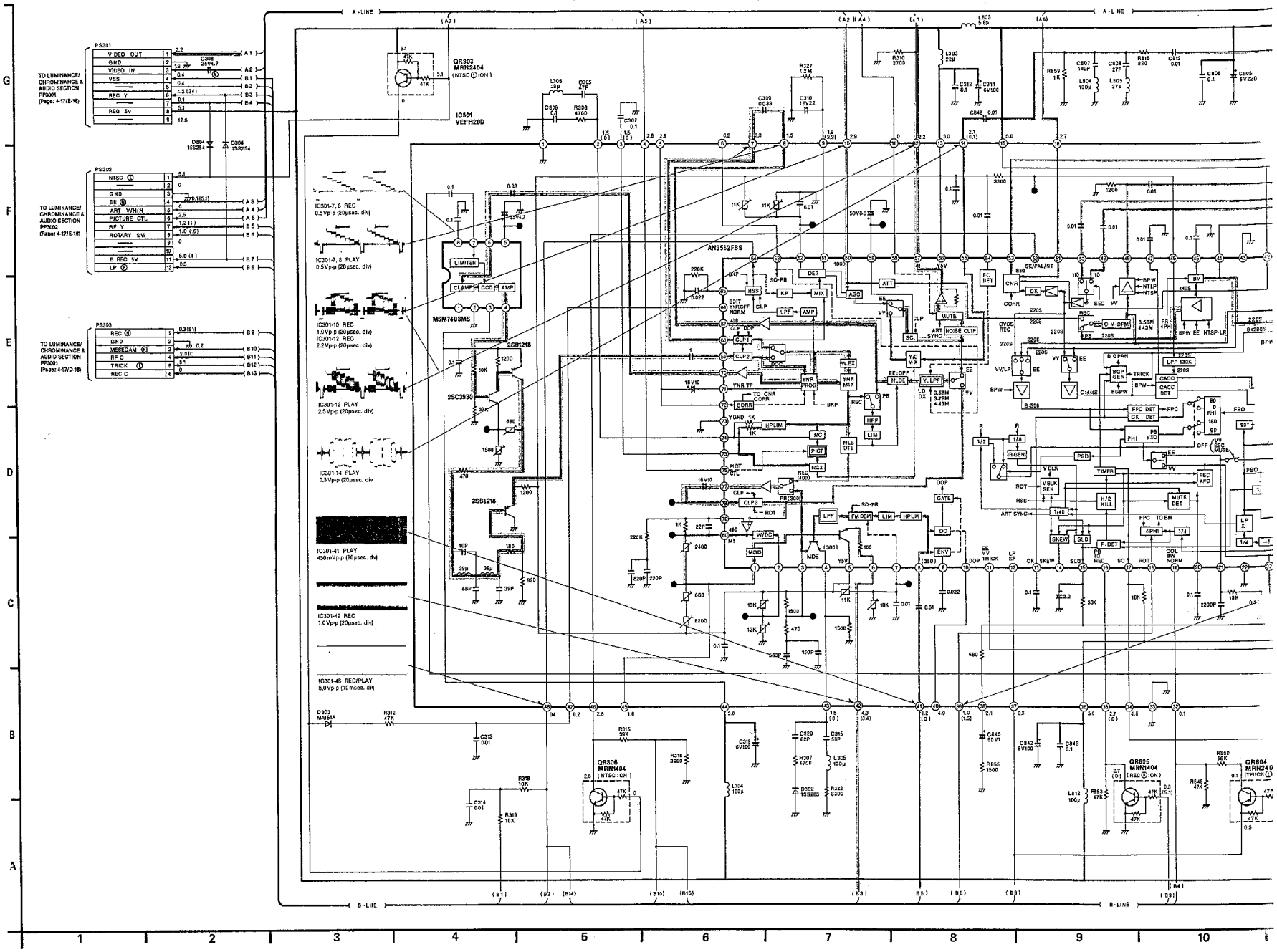

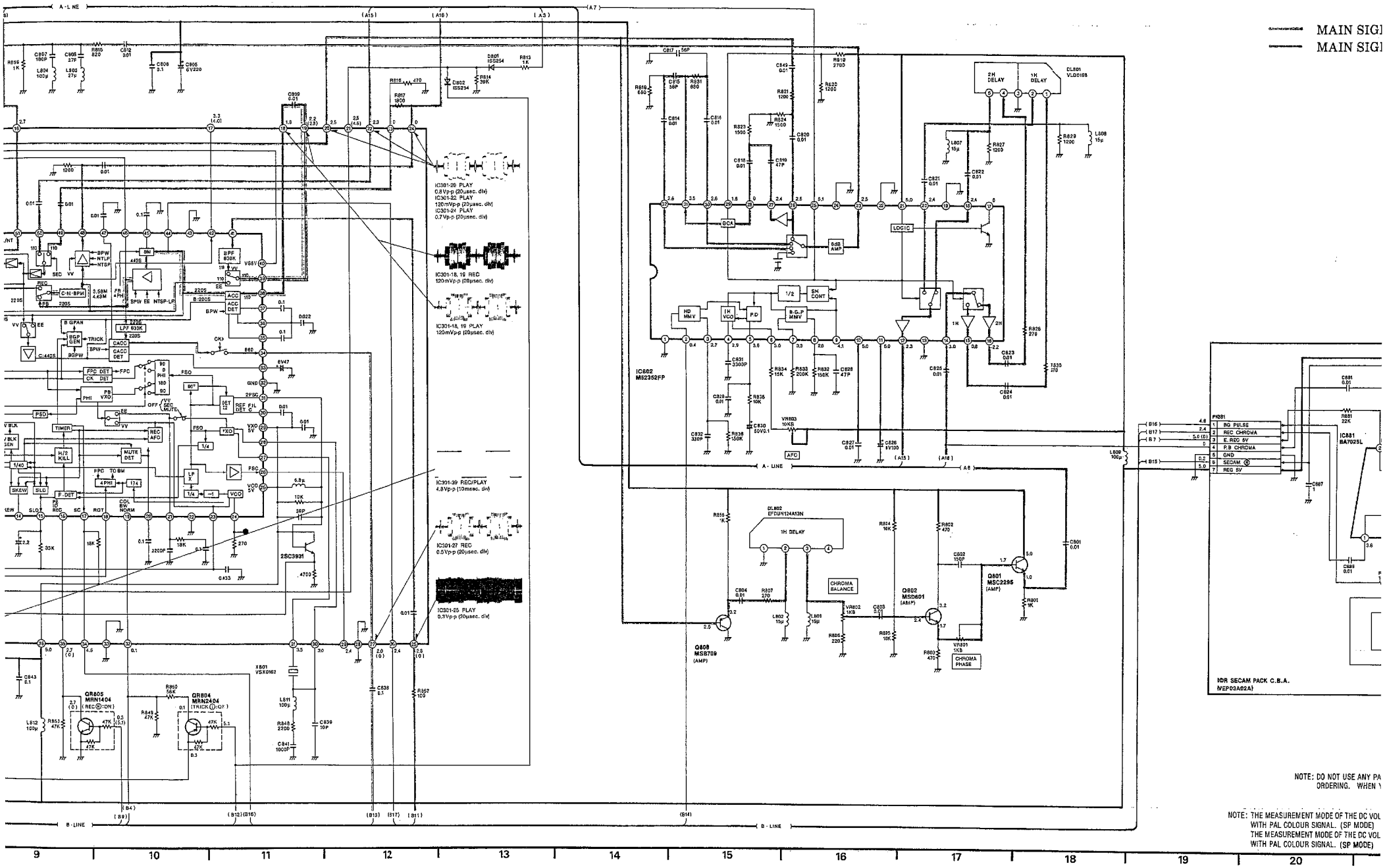
MAIN SIGI
MAIN SIGI
IC301-20 PLAY
0.8Vp-p (20μsec. div)
IC301-22 PLAY
120mVp-p (20μsec. div)
IC301-24 PLAY
0.7Vp-p (20μsec. div)
IC301-18, 19 REC
120mVp-p (20μsec. div)
IC301-18, 19 PLAY
120mVp-p (20μsec. div)
IC301-39 REC/PLAY
4.8Vp-p (10msec. div)
IC301-27 REC
0.5Vp-p (20μsec. div)
IC301-25 PLAY
0.3Vp-p (20μsec. div)
IC602
M52352FP
IC881
BA7025L
DL801
V.DD168
DL802
EFDUN124A13N
Q801
MSC2295
(AMP)
Q802
MSD601
(AMP)
Q808
MSB709
(AMP)
QR805
MRN1404
QR804
MRN2404
X801
VSX0162
2SC3931
A-LINE
B-LINE
NOTE: DO NOT USE ANY PA
ORDERING. WHEN
NOTE: THE MEASUREMENT MODE OF THE DC VOL
WITH PAL COLOUR SIGNAL. (SP MODE)
THE MEASUREMENT MODE OF THE DC VOL
WITH PAL COLOUR SIGNAL. (SP MODE)

MAIN SIGNAL PATH IN REC MODE
MAIN SIGNAL PATH IN PLAYBACK MODE

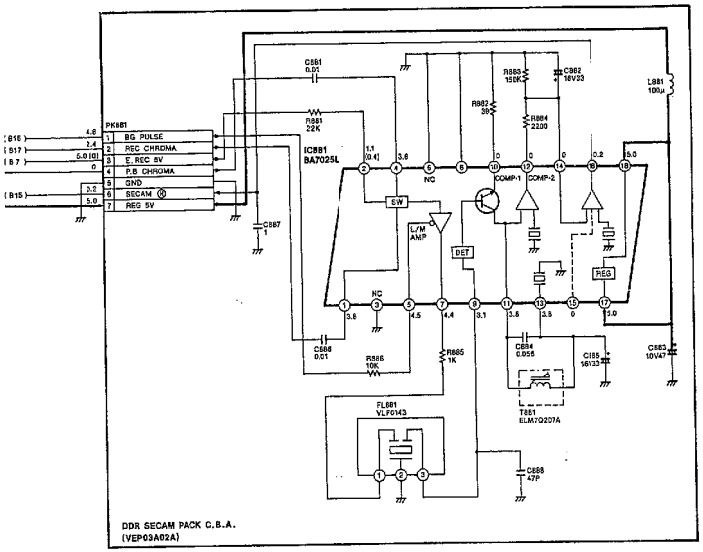

NOTE: DO NOT USE ANY PART NUMBER SHOWN ON THIS SCHEMATIC DIAGRAM FOR ORDERING. WHEN YOU ORDER A PART, PLEASE REFER TO PARTS LIST.

NOTE: THE MEASUREMENT MODE OF THE DC VOLTAGE IN THE BRACKETS ( ) ON THIS DIAGRAM IS RECORD MODE WITH PAL COLOUR SIGNAL. (SP MODE)
THE MEASUREMENT MODE OF THE DC VOLTAGE OUT OF THE BRACKETS ON THIS DIAGRAM IS PLAYBACK MODE WITH PAL COLOUR SIGNAL. (SP MODE)

19	20	21	22

4-12. LUMINANCE & CHROMINANCE PACK C B.A (VEP03975F: NV-HD90EE)

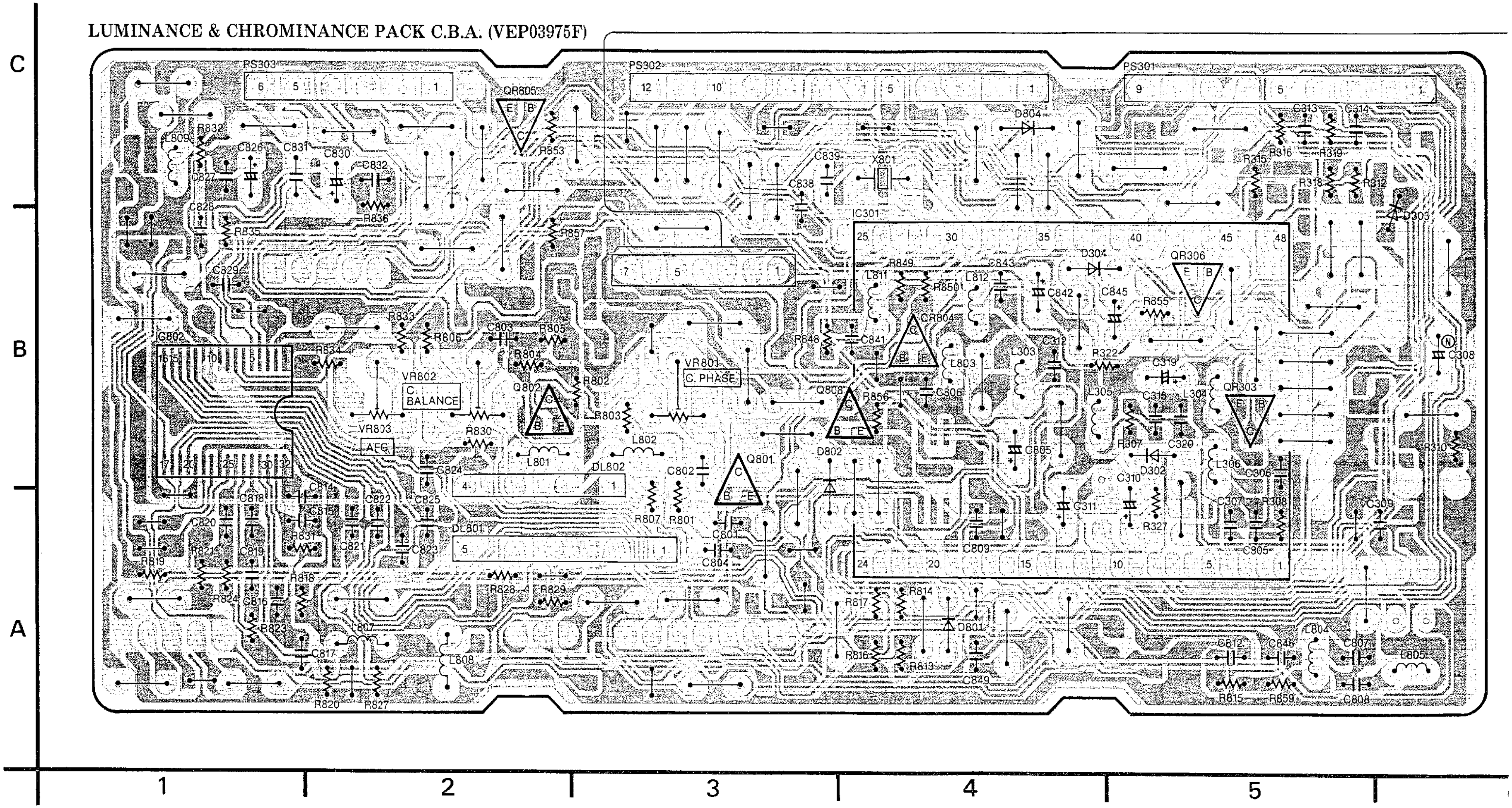

LUMINANCE & CHROMINANCE PACK C.B.A.	
Transistor	
Q801	B-3
Q802	B-2
Q808	B-4
Transistor & Resistor	
QR303	B-5
QR306	B-5
QR804	B-4
QR805	C-2
Integrated Circuit	
IC301	B-4
IC802	B-1
IC881	B-6
Adjustment	
T881	B-7
VR801	B-3
VR802	B-2
VR803	B-2
Connector	
PK881	A-6
PS301	C-5
PS302	C-3
PS303	C-1

ADDRESS INFORMATION

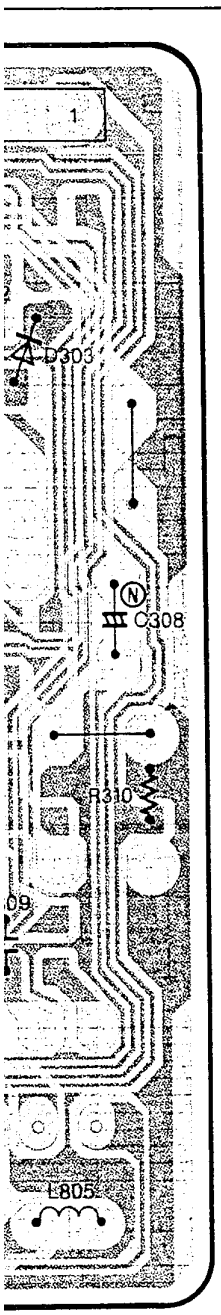

DDR SECAM PACK C B A (VEP03A02A)

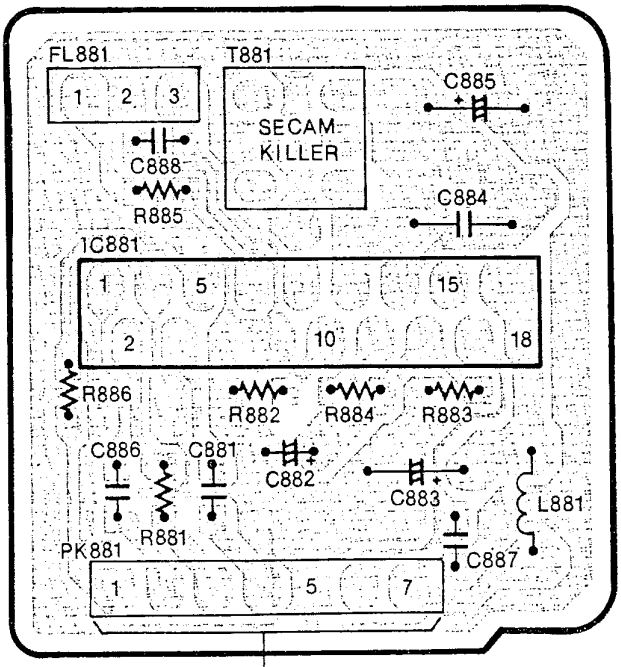

6 7

4-13. Hi-Fi AUDIO PACK SCHEMATIC DIAGRAM

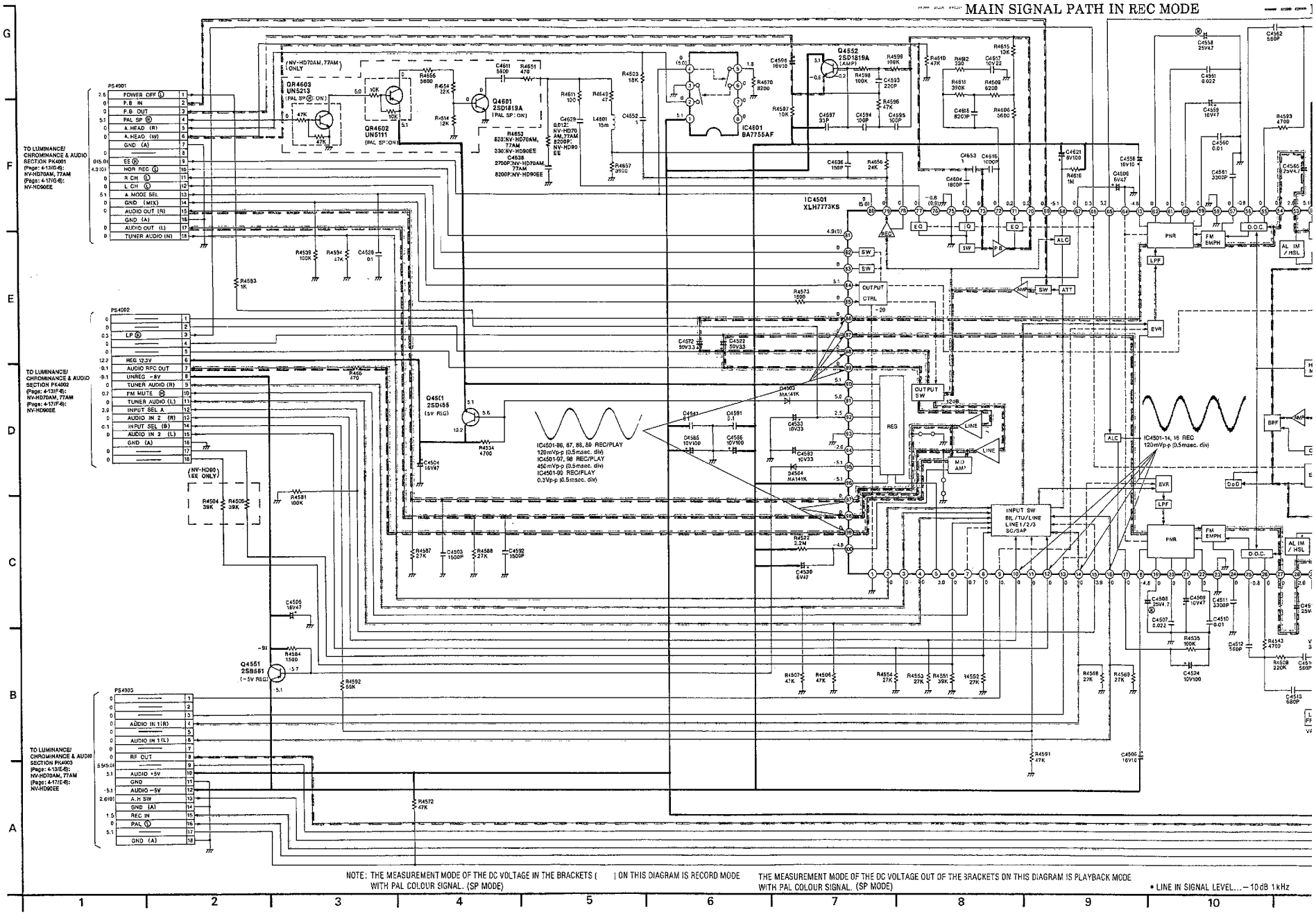

NOTE: THE MEASUREMENT MODE OF THE DC VOLTAGE IN THE BRACKETS ( ) ON THIS DIAGRAM IS RECORD MODE WITH PAL COLOUR SIGNAL. (SP MODE)

THE MEASUREMENT MODE OF THE DC VOLTAGE OUT OF THE BRACKETS ON THIS DIAGRAM IS PLAYBACK MODE WITH PAL COLOUR SIGNAL. (SP MODE)

• LINE IN SIGNAL LEVEL...−10dB 1kHz

MAIN SIGNAL PATH IN REC MODE

MAIN SIGNAL PATH IN PLAYBACK MODE

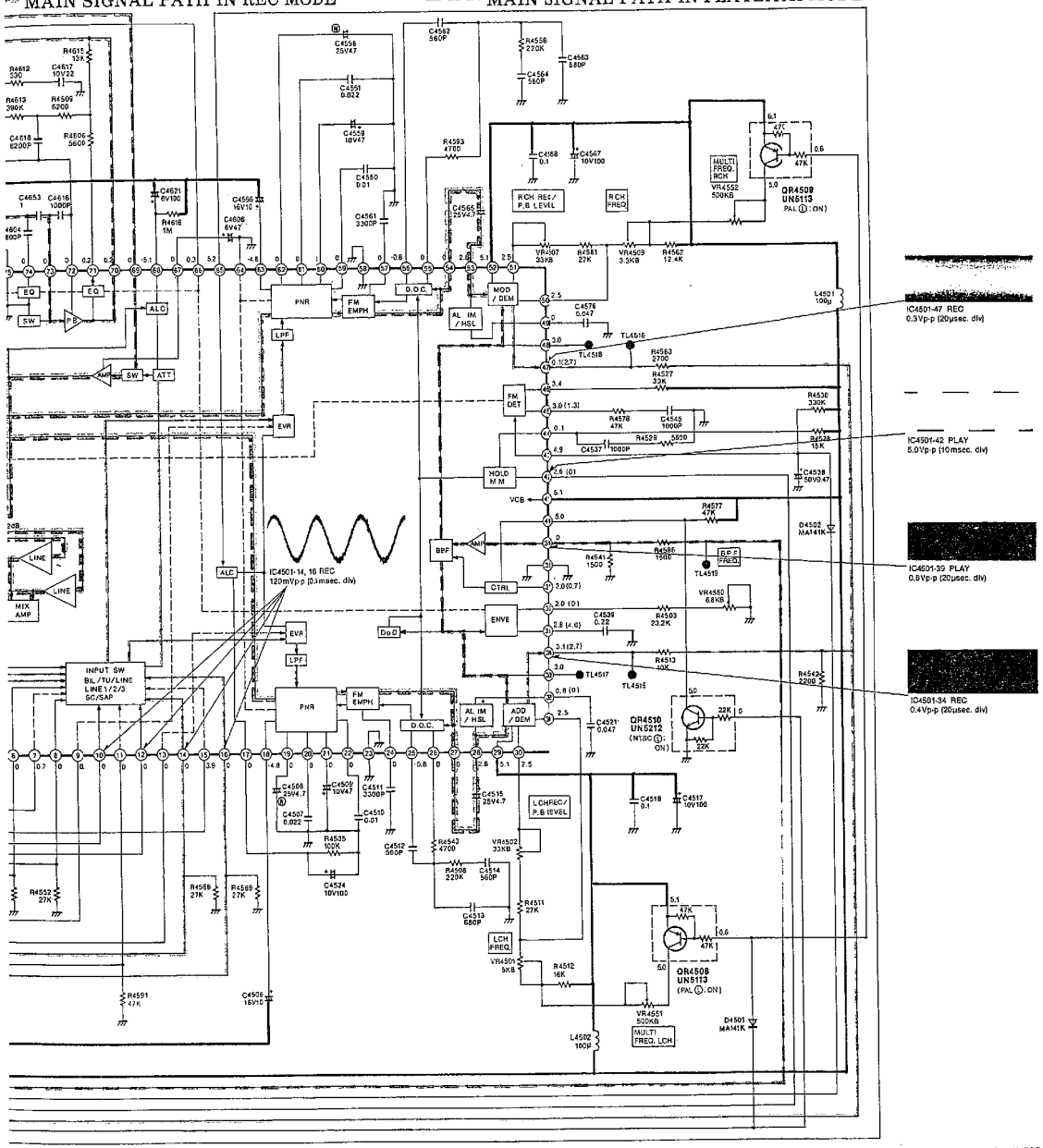

4-14 Hi-Fi AUDIO PACK C B A (VEP04447PJ: NV-HD70AM, HD77AM) (VEP04447PH: NV-HD90EE)

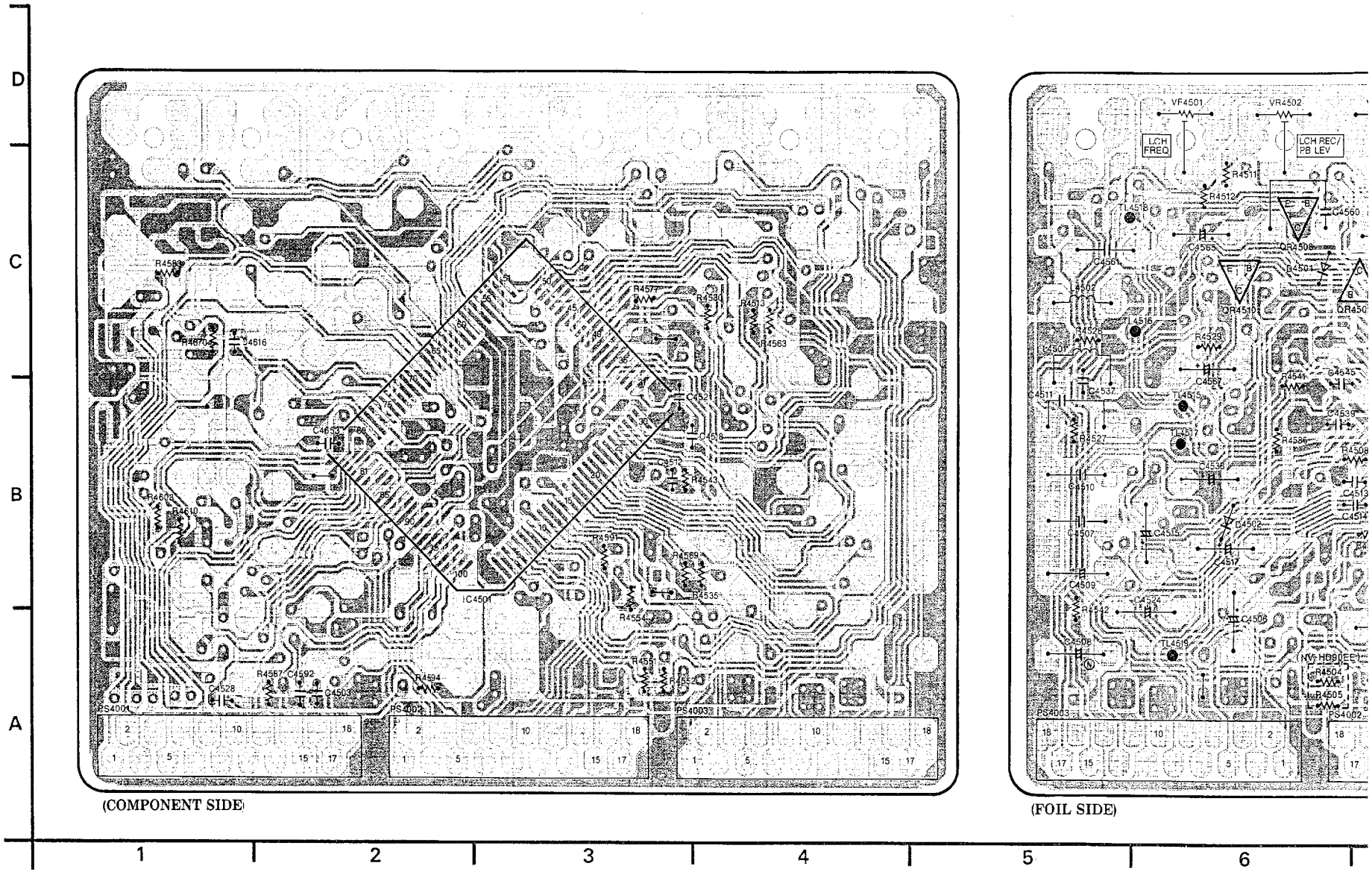

(COMPONENT SIDE)

(FOIL SIDE)

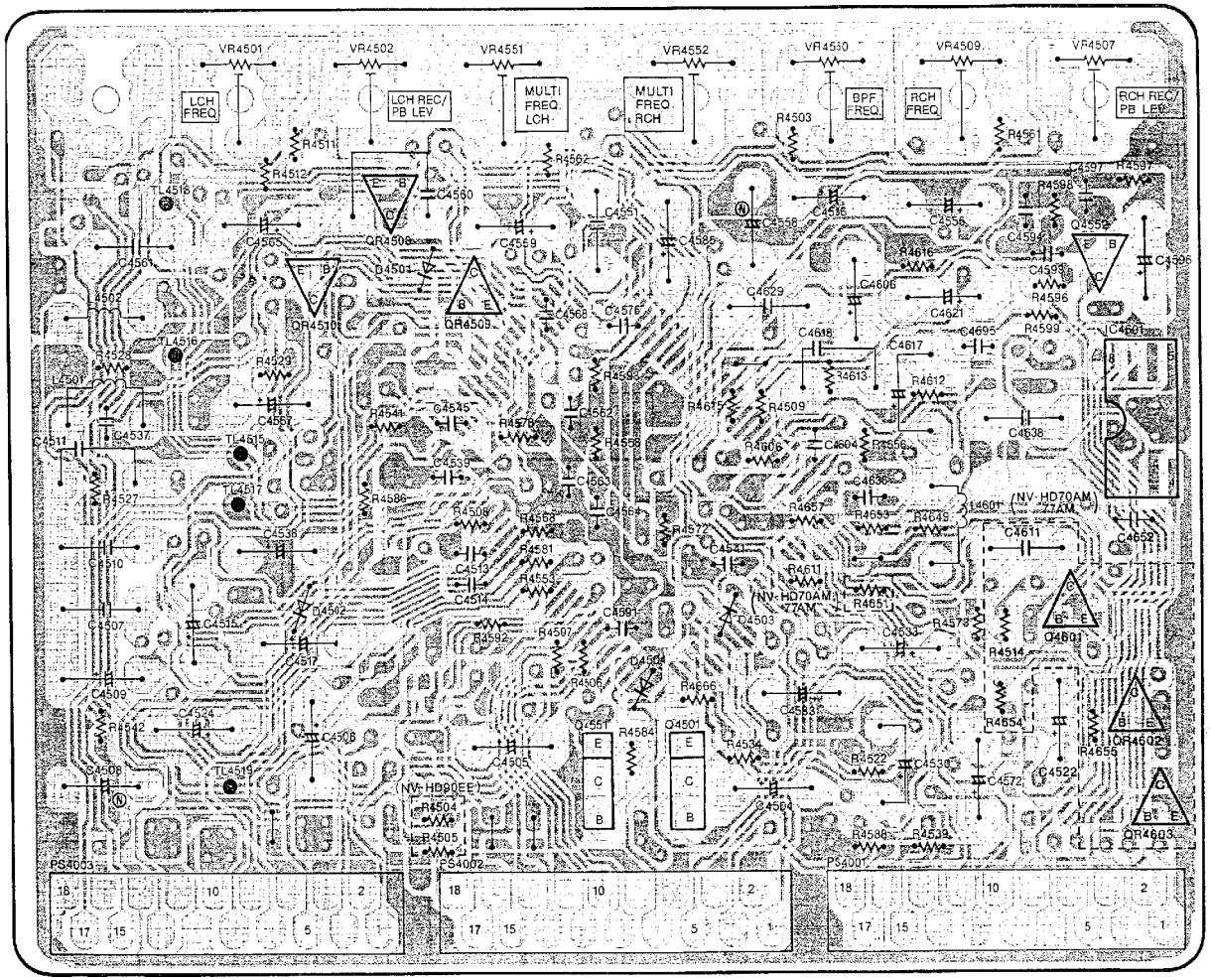

(FOIL SIDE)

HI-FI AUDIO PACK C.B.A.	
Transistor	
Q4501	A-7
Q4551	A-7
Q4552	C-9
Q4601	B-9
Transistor & Resistor	
QR4508	C-6
QR4509	C-7
QR4510	C-6
QR4602	A-9
QR4603	A-9
Integrated Circuit	
IC4501	B-3
IC4601	C-9
Adjustment	
VR4501	D-6
VR4502	D-6
VR4507	D-9
VR4509	D-8
VR4550	D-8
VR4551	D-7
VR4552	D-7
Connector	
PS4001	A-1
PS4001	A-8
PS4002	A-2
PS4002	A-7
PS4003	A-4
PS4003	A-5

ADDRESS INFORMATION

5 6 7 8 9

4-15. NICAM DECODER SCHEMATIC DIAGRAM (NV-HD77AM)

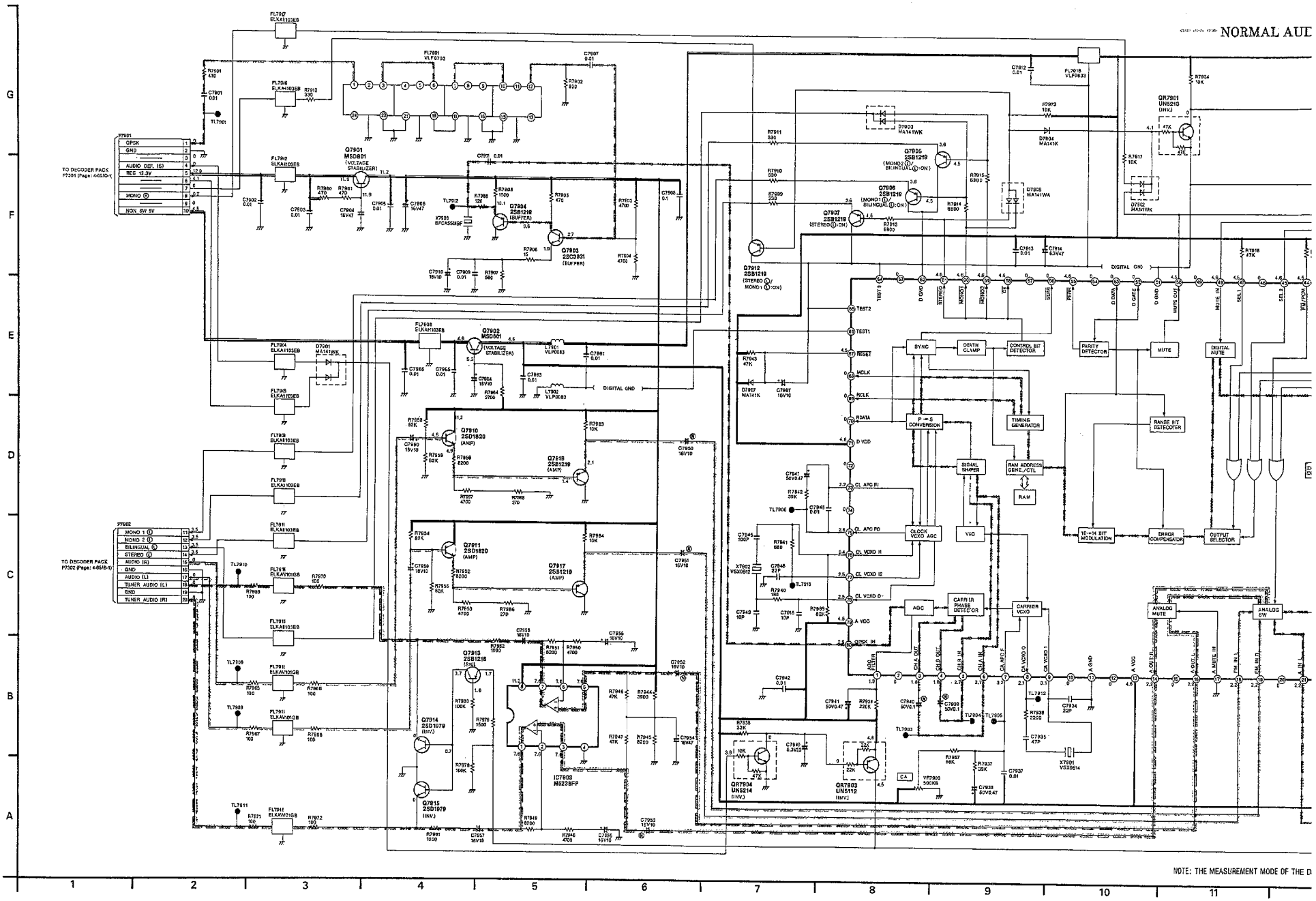

NORMAL AUDIO SIGNAL PATH

NICAM AUDIO SIGNAL PATH

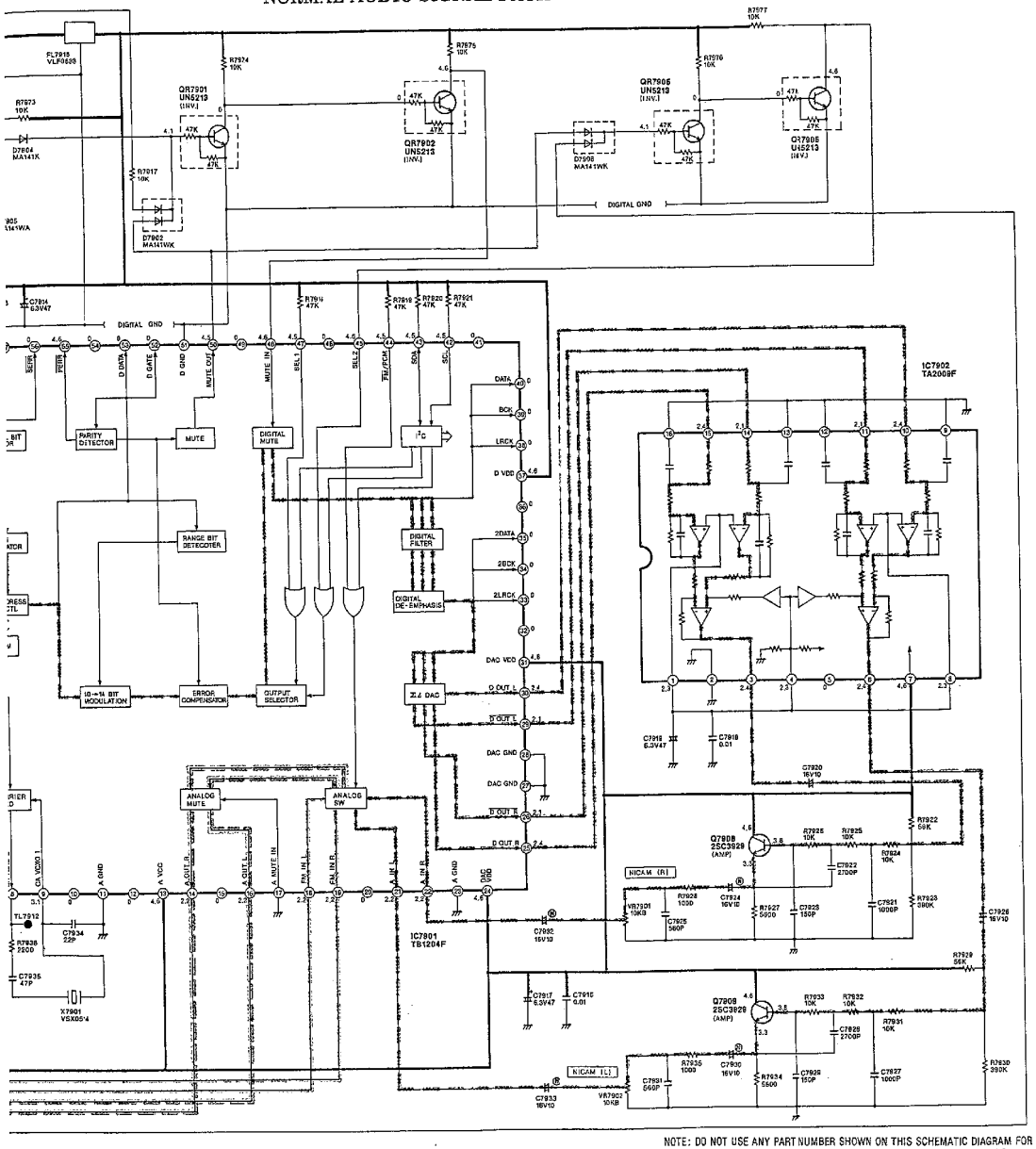

NOTE: THE MEASUREMENT MODE OF THE DC VOLTAGE ON THIS DIAGRAM IS STOP MODE.

NOTE: DO NOT USE ANY PART NUMBER SHOWN ON THIS SCHEMATIC DIAGRAM FOR ORDERING. WHEN YOU ORDER A PART, PLEASE REFER TO PARTS LIST.

10 | 11 | 12 | 13 | 14 | 15

4-16 NICAM DECODER C B A (VEP07675C: NV-HD77AM)

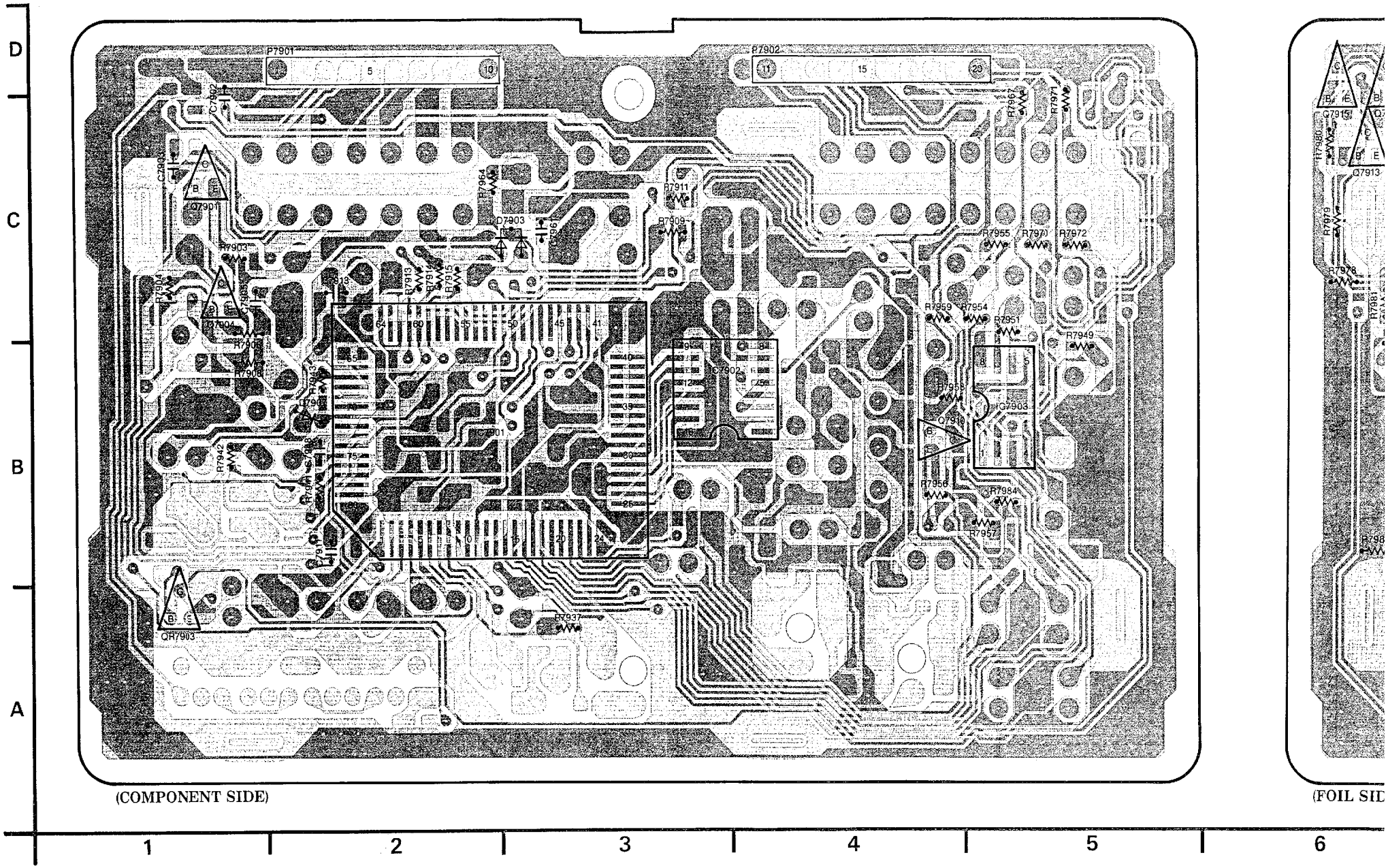

(COMPONENT SIDE)

(FOIL SID

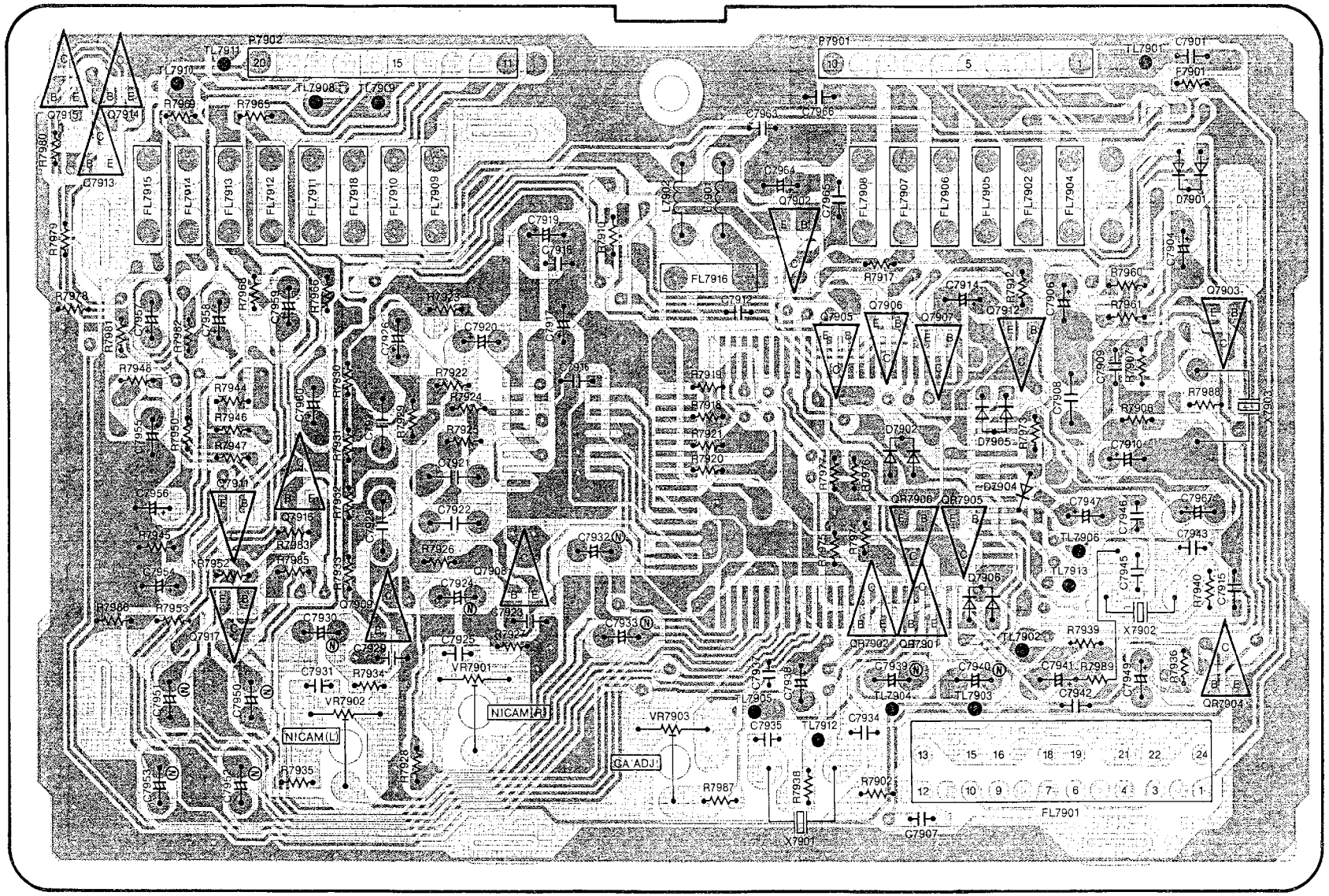

(FOIL SIDE)

NICAM DECODER PACK C.B.A.	
Transistor	
Q7901	C-1
Q7902	C-9
Q7903	C-10
Q7904	C-1
Q7905	C-9
Q7906	C-9
Q7907	C-9
Q7908	B-8
Q7909	B-7
Q7910	B-4
Q7911	B-7
Q7912	C-10
Q7913	C-6
Q7914	C-6
Q7915	C-6
Q7916	B-7
Transistor & Resistor	
QR7901	B-9
QR7902	B-9
QR7903	A-1
QR7904	A-10
QR7905	B-9
QR7906	B-9
Integrated Circuit	
IC7901	B-2
IC7902	B-3
IC7903	B-5
Adjustment	
VR7901	A-8
VR7902	A-7
VR7903	A-8
Connector	
PK7901	D-2
PK7901	D-9
PK7902	D-4
PK7902	D-7

ADDRESS INFORMATION

6 7 8 9 10

4-17 HEAD AMP SCHEMATIC DIAGRAM

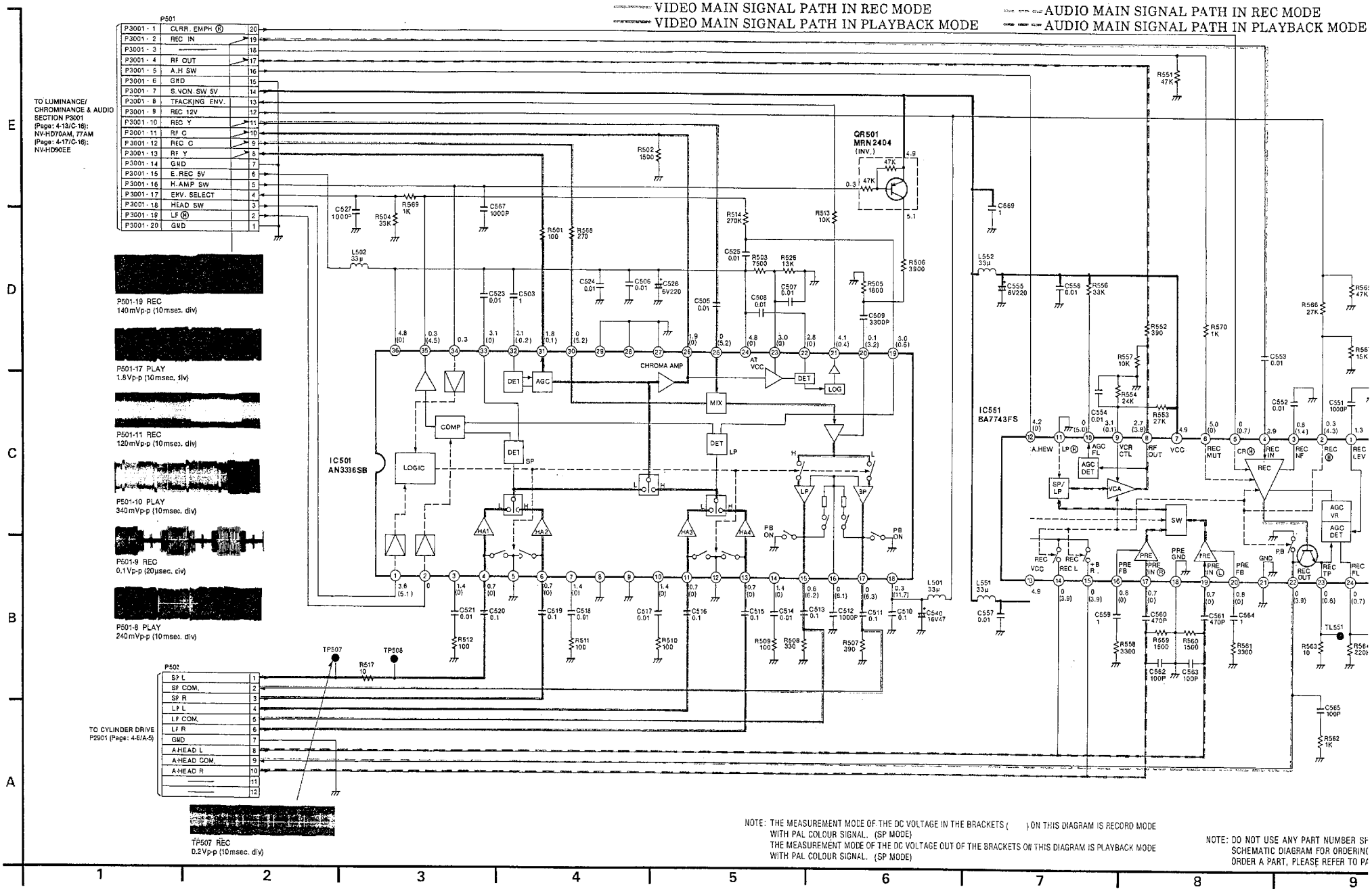

4-18 HEAD AMP C B A (VEP05176C)

ATH IN REC MODE
ATH IN PLAYBACK MODE

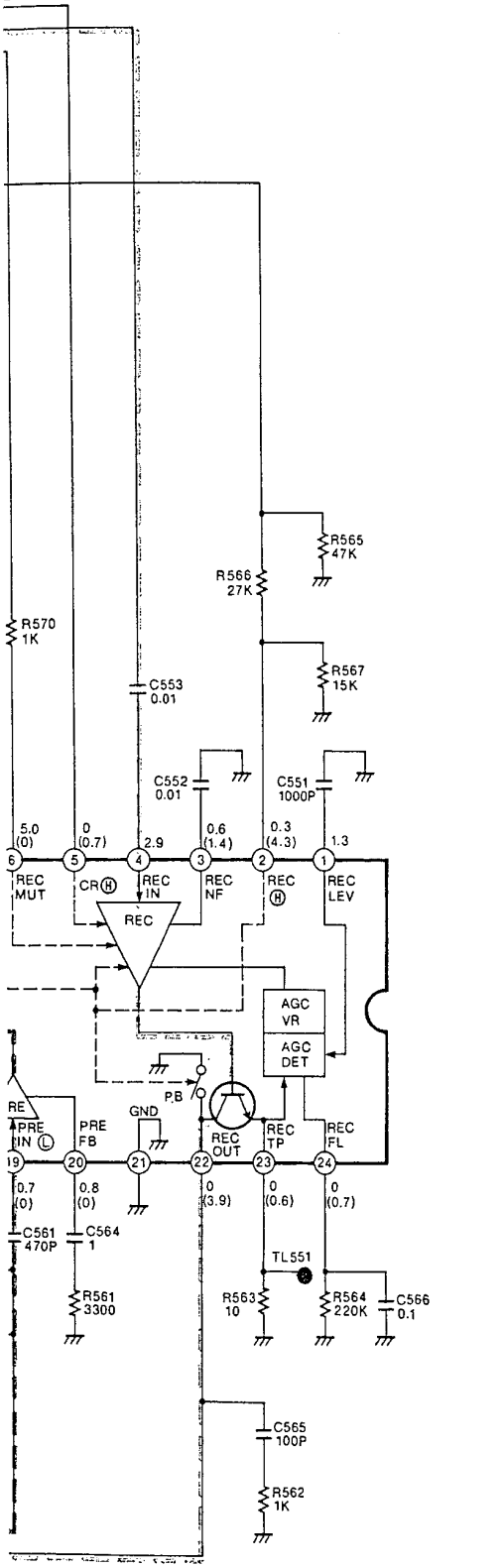

NOTE: DO NOT USE ANY PART NUMBER SHOWN ON THIS SCHEMATIC DIAGRAM FOR ORDERING. WHEN YOU ORDER A PART, PLEASE REFER TO PARTS LIST.

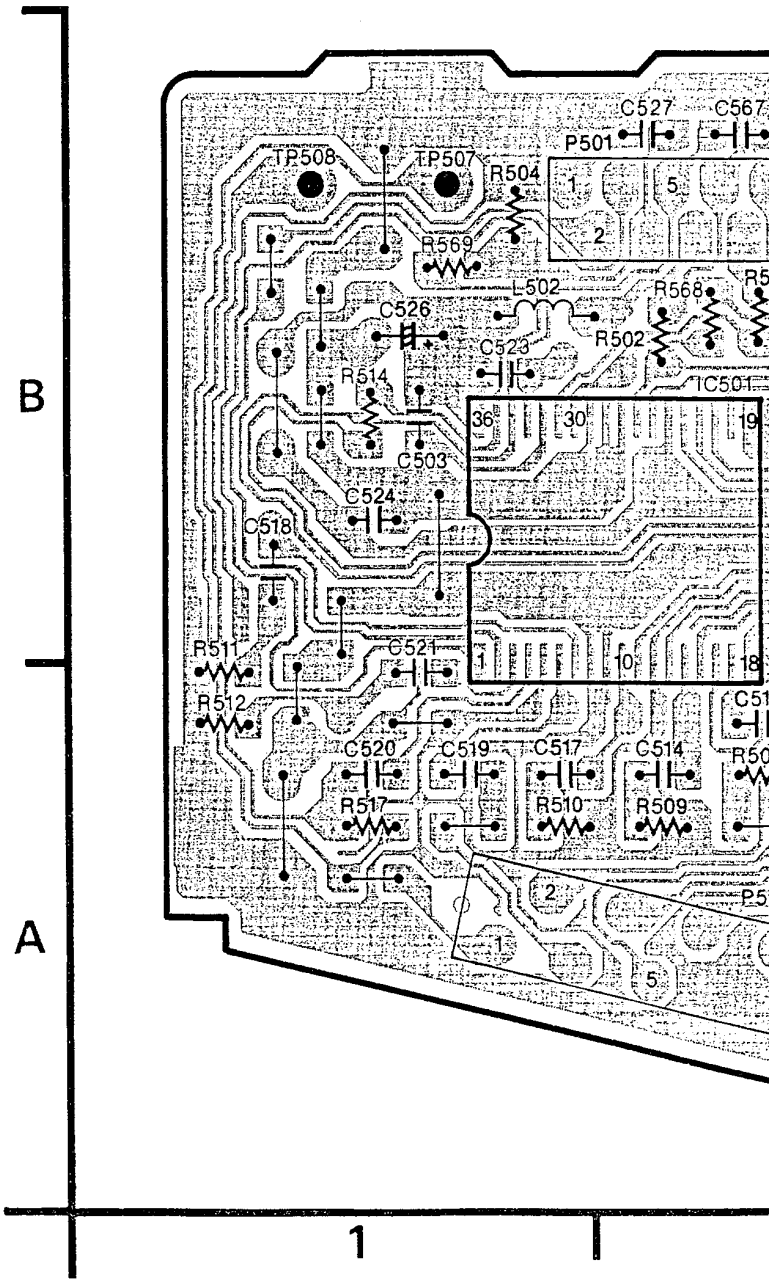

4-18 HEAD AMP C B A (VEP05176C)

ATH IN REC MODE
ATH IN PLAYBACK MODE

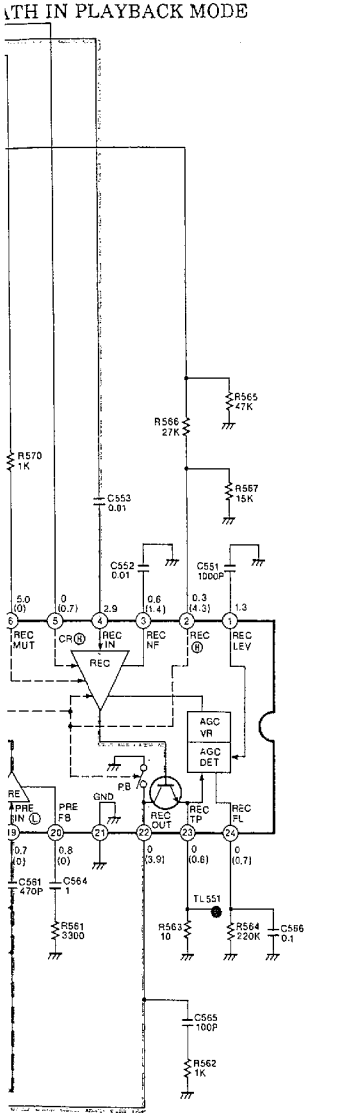

NOTE: DO NOT USE ANY PART NUMBER SHOWN ON THIS SCHEMATIC DIAGRAM FOR ORDERING. WHEN YOU ORDER A PART, PLEASE REFER TO PARTS LIST.

HEAD AMP C.B.A.	
Transistor & Resistor	
QR501	B-3
Integrated Circuit	
IC501 IC551	B-1 B-4
Test Point	
TP507 TP508	B-1 B-1
Connector	
P501 P502	B-2 A-1

ADDRESS INFORMATION

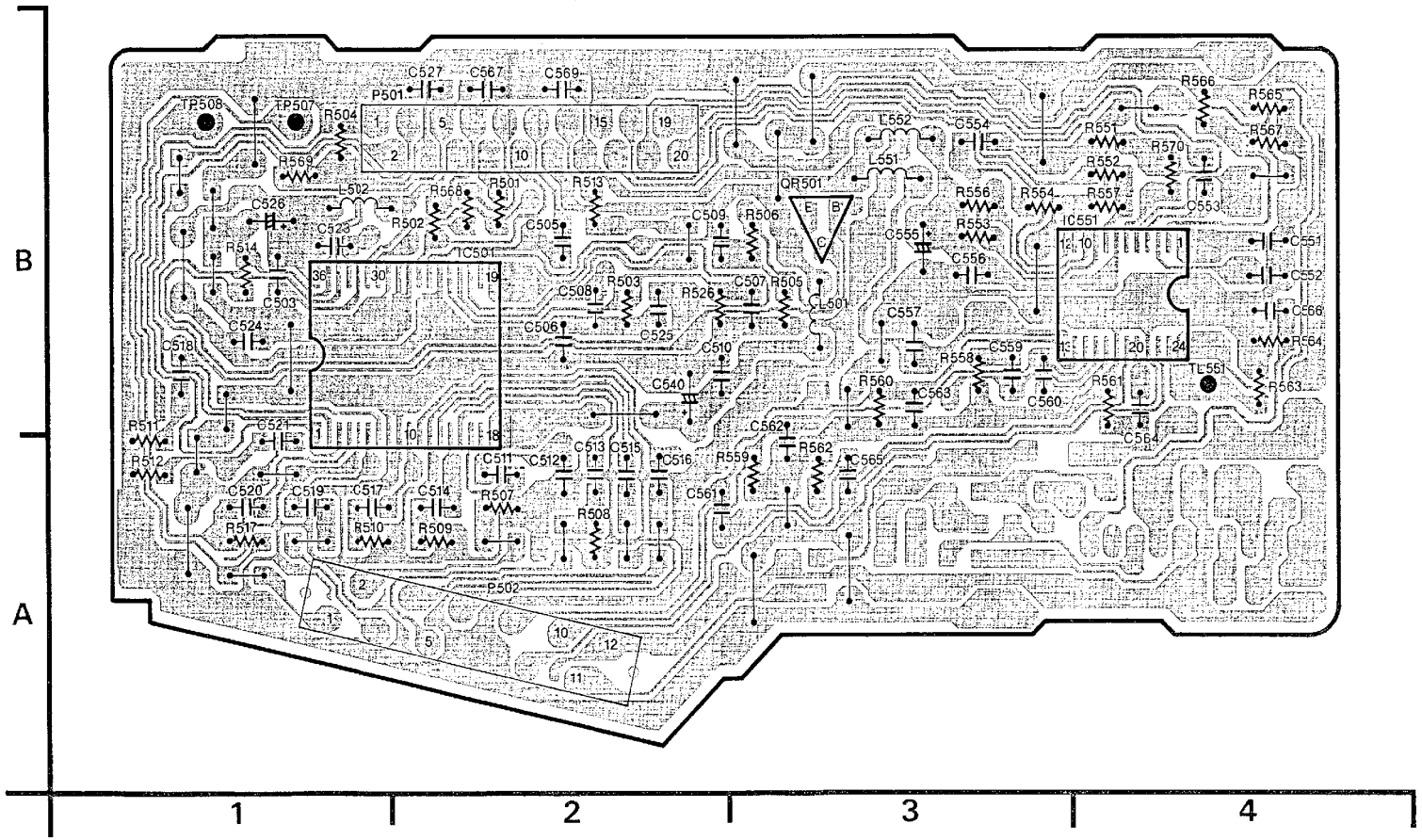

4-19. DECODER PACK SCHEMATIC DIAGRAM (NV-HD70AM, HD77AM)

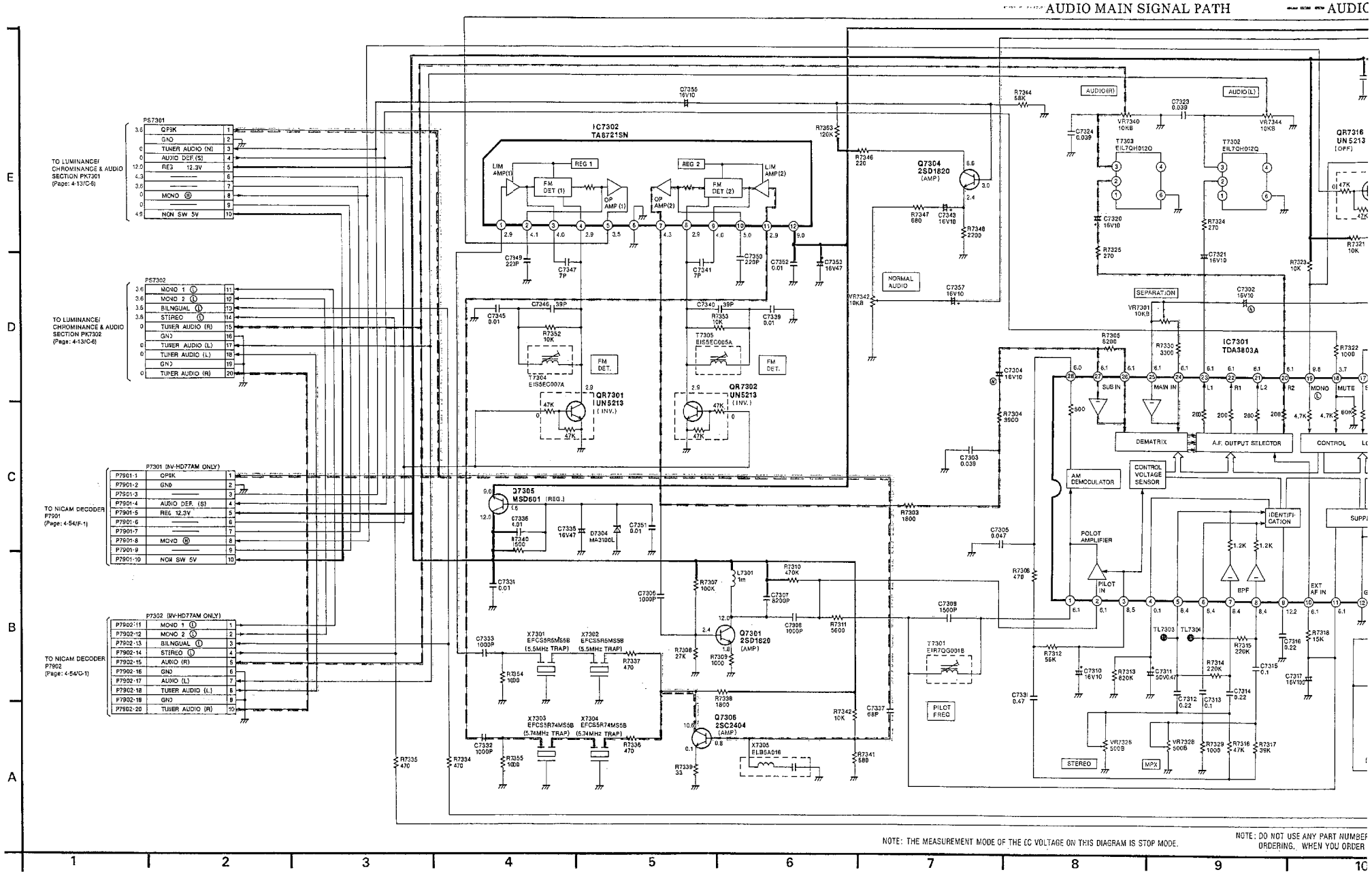

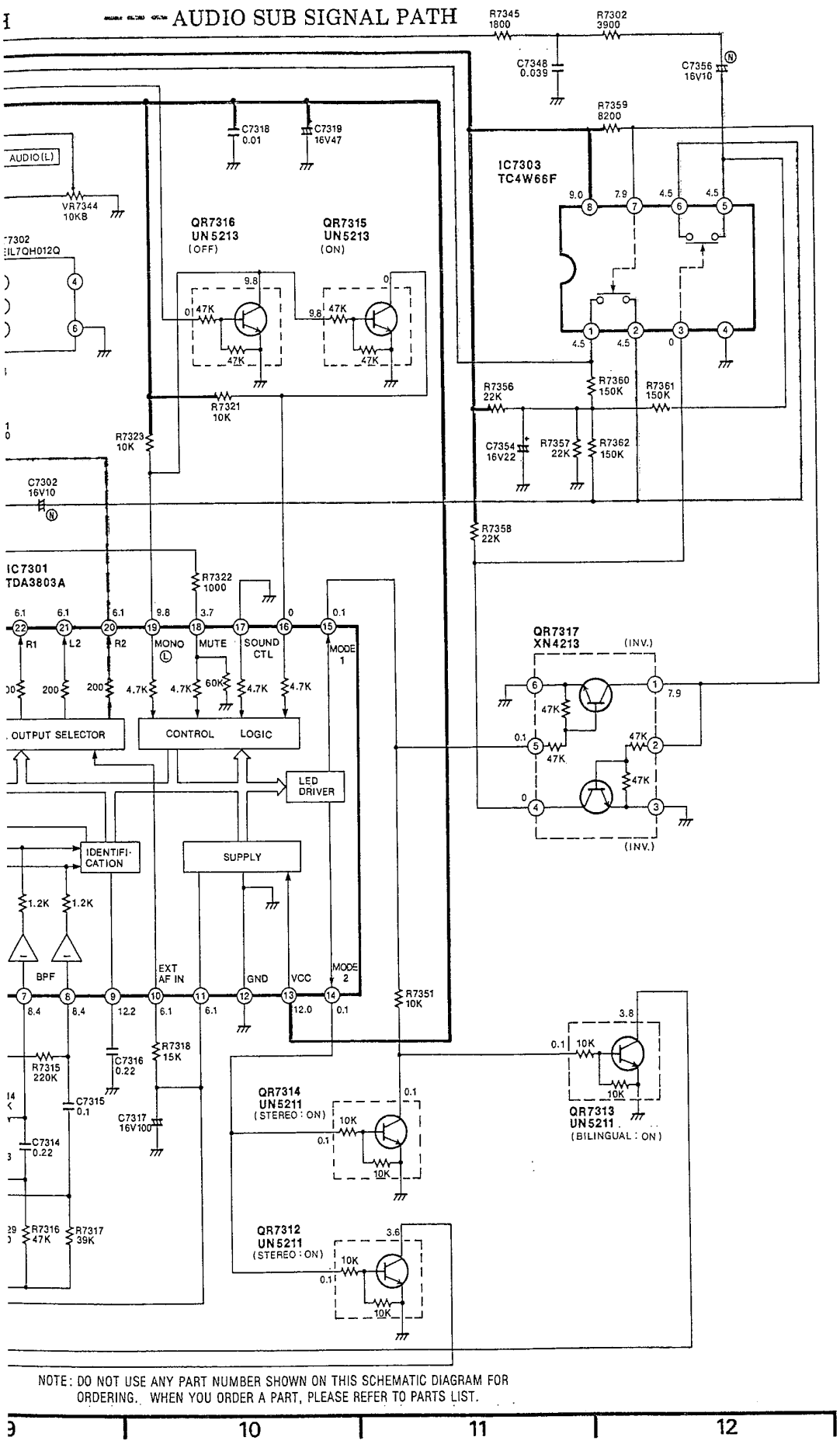

NOTE: DO NOT USE ANY PART NUMBER SHOWN ON THIS SCHEMATIC DIAGRAM FOR ORDERING. WHEN YOU ORDER A PART, PLEASE REFER TO PARTS LIST.

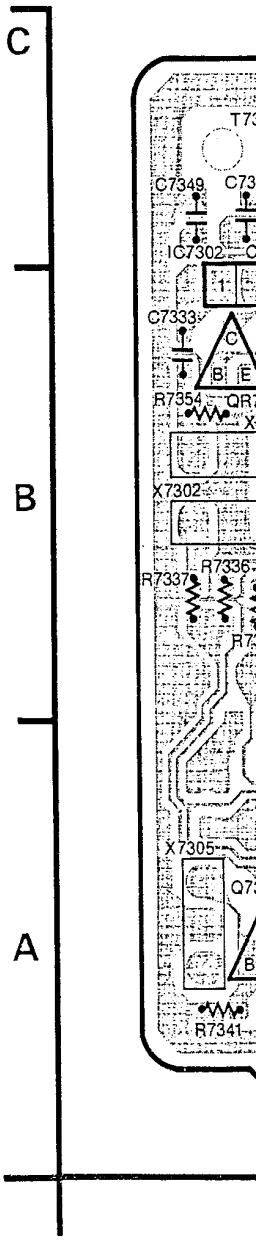

4-20 DECODER PACK C B A (VEP07725A: NV-HD70AM) (VEP07725B: NV-HD77AM)

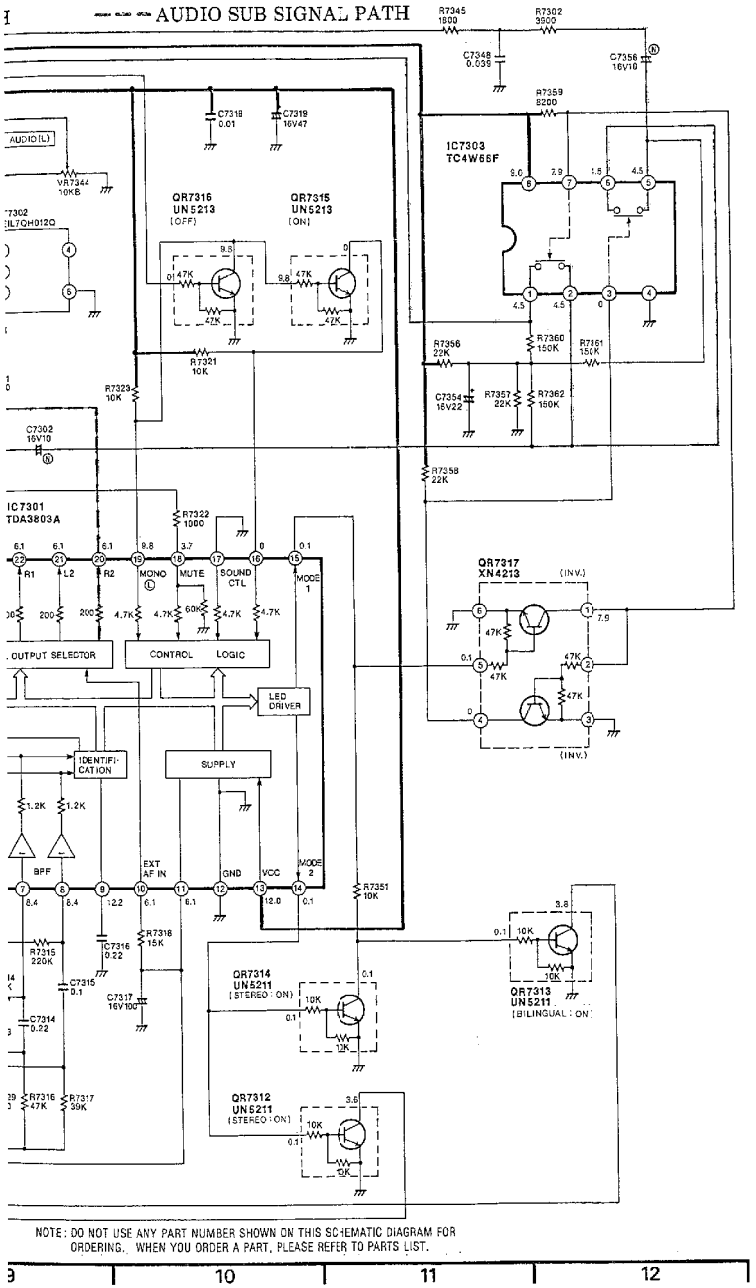

NOTE: DO NOT USE ANY PART NUMBER SHOWN ON THIS SCHEMATIC DIAGRAM FOR ORDERING. WHEN YOU ORDER A PART, PLEASE REFER TO PARTS LIST.

DECODER PACK C.B.A.			
Transistor		**Adjustment**	
Q7301	C-2	VR7301	A-3
Q7304	B-1	VR7326	C-4
Q7305	C-2	VR7328	C-3
Q7306	A-1	VR7340	A-4
Transistor & Resistor		VR7342	A-1
QR7301	B-1	VR7344	A-2
QR7302	B-1	**Connector**	
QR7312	B-4	P7301	A-1
QR7313	B-4	P7302	A-3
QR7314	B-4	PS7301	A-1
QR7315	B-3	PS7302	A-3
QR7316	B-4		
QR7317	B-3		
Integrated Circuit			
IC7301	B-3		
IC7302	C-1		
IC7303	B-2		

ADDRESS INFORMATION

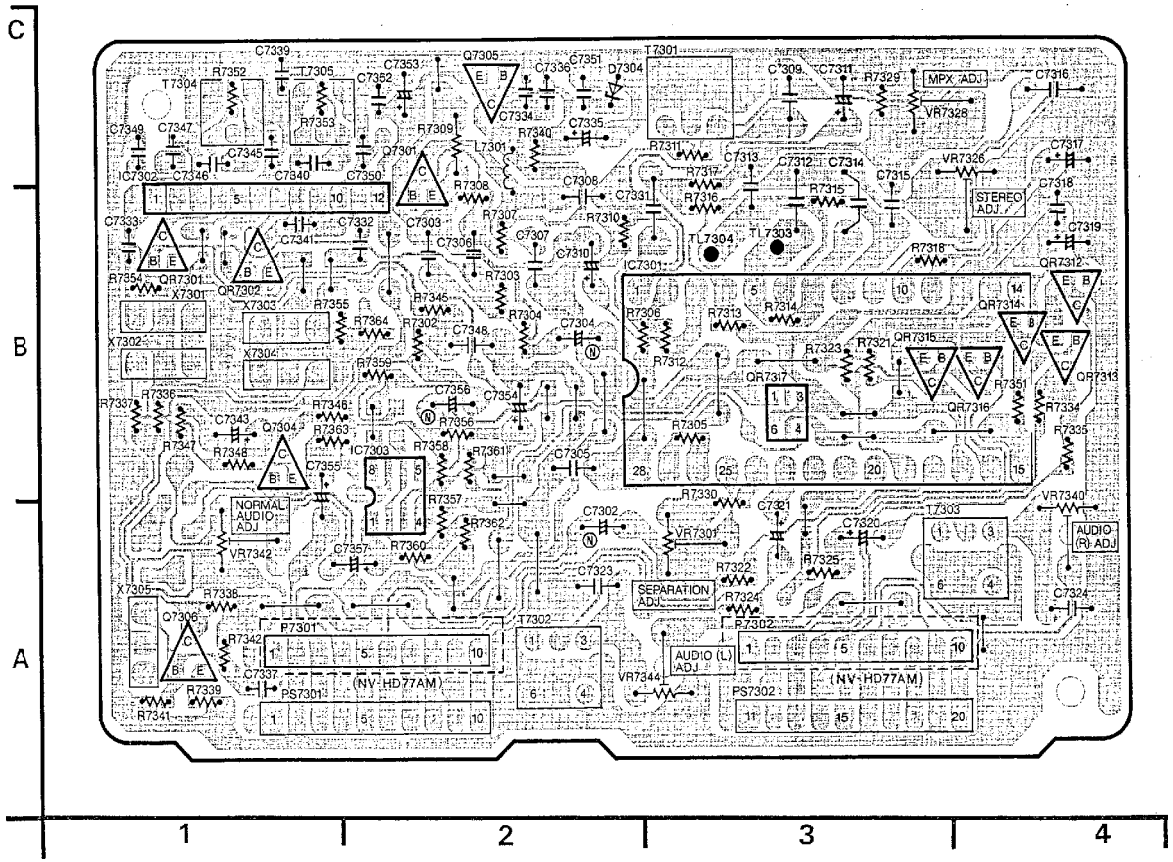

4-21. DECODER PACK SCHEMATIC DIAGRAM (NV-HD90EE)

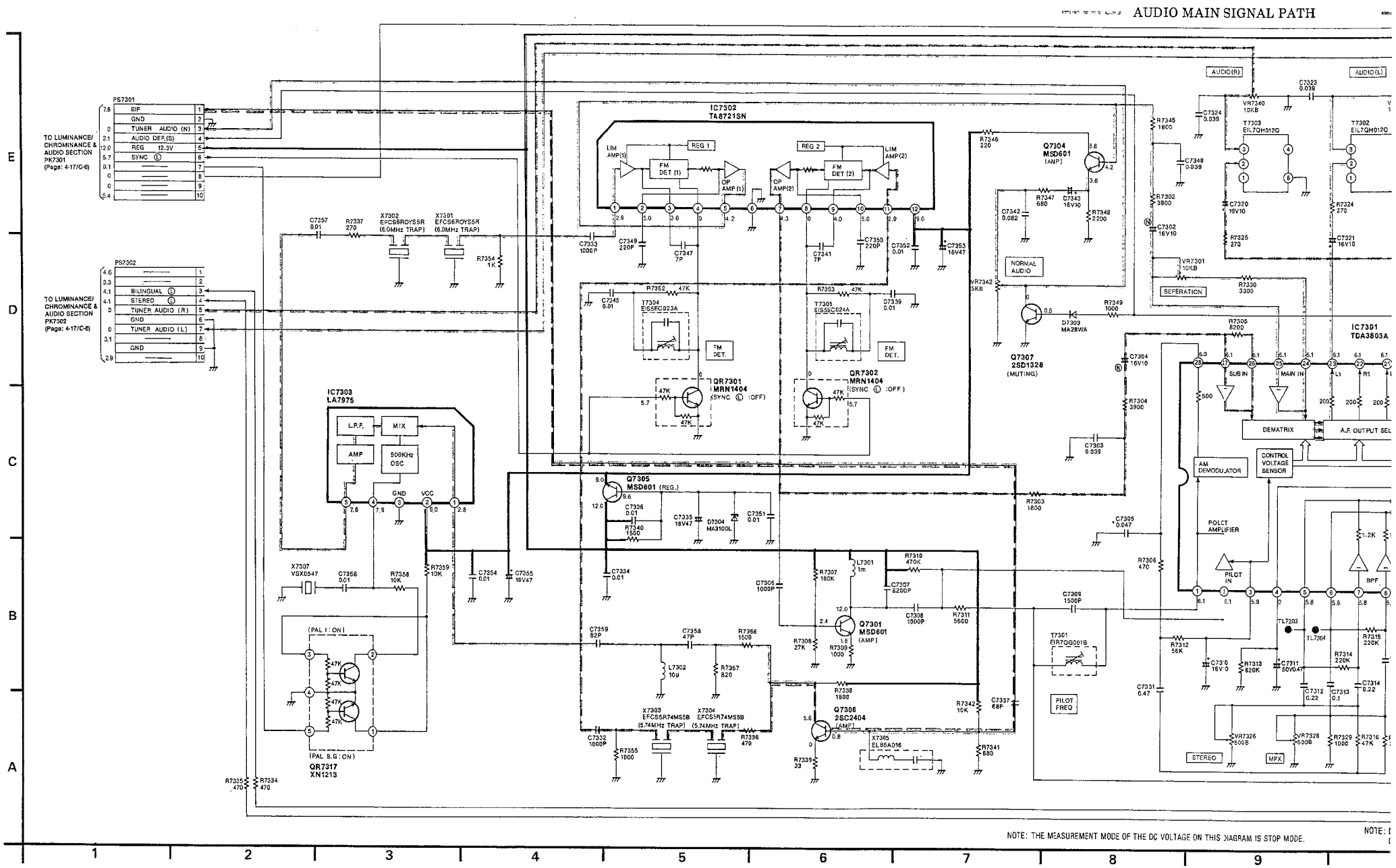

NAL PATH

AUDIO SUB SIGNAL PATH

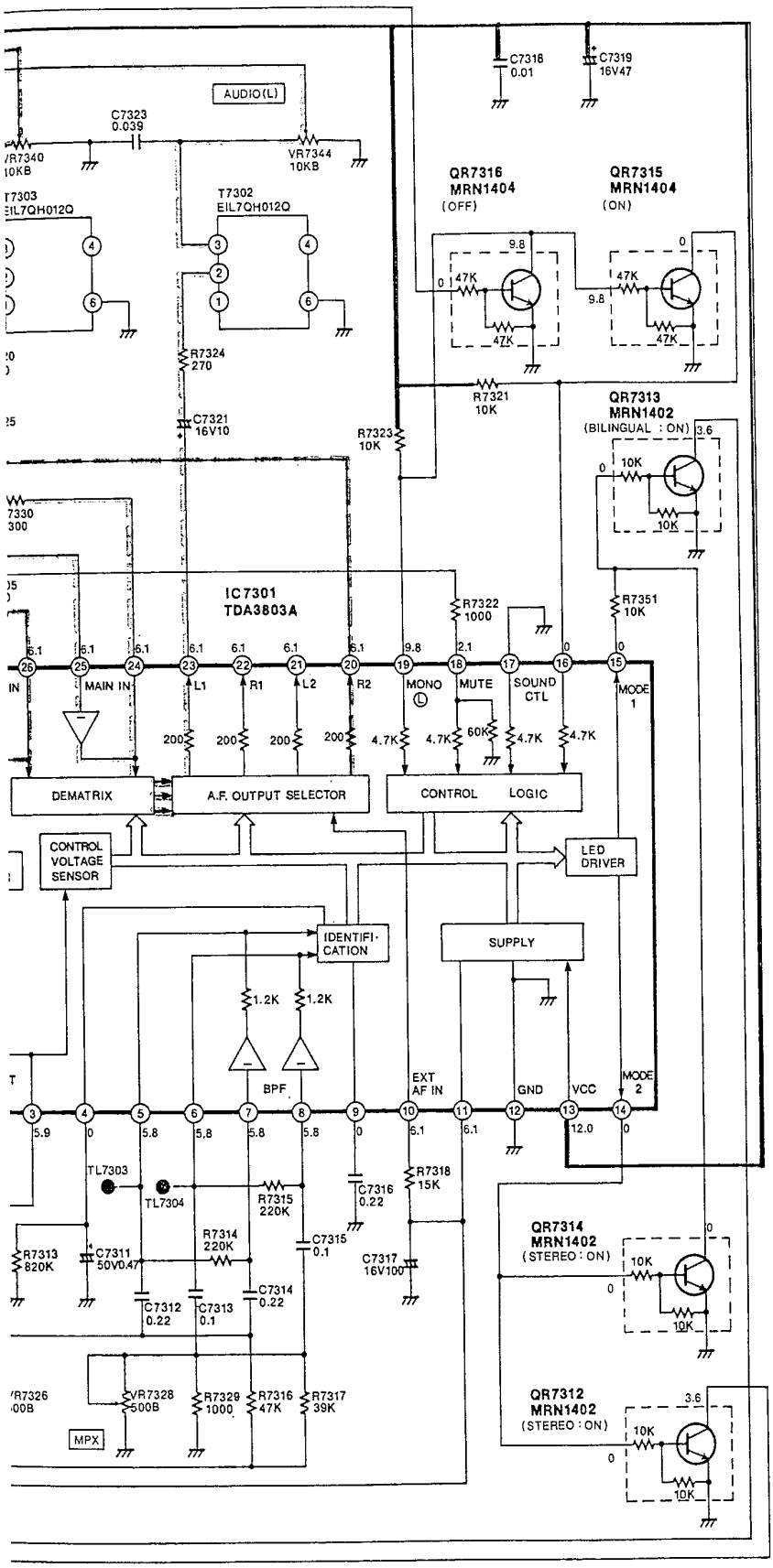

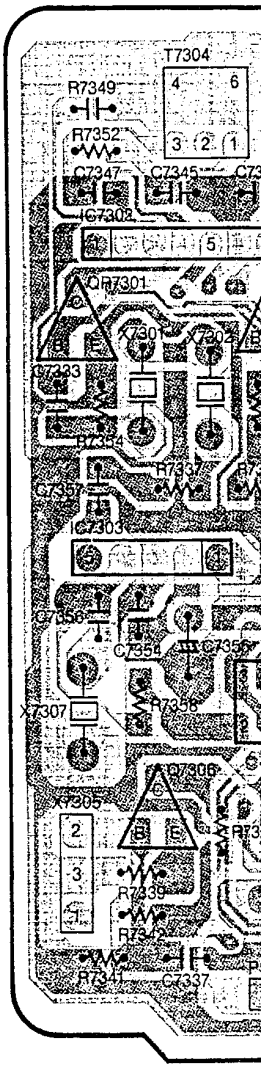

GRAM IS STOP MODE.

NOTE: DO NOT USE ANY PART NUMBER SHOWN ON THIS SCHEMATIC DIAGRAM FOR ORDERING. WHEN YOU ORDER A PART, PLEASE REFER TO PARTS LIST.

9 10 11 1

C B A

4-22 DECODER PACK C B A (VEP07743A: NV-HD90EE)

NAL PATH — AUDIO SUB SIGNAL PATH

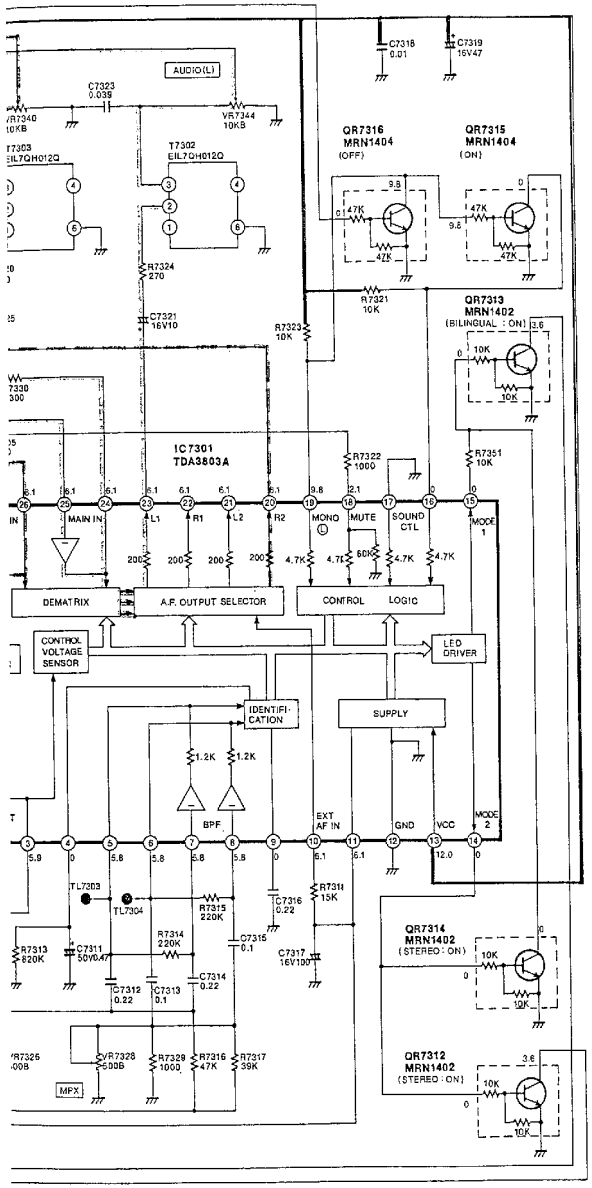

NOTE: DO NOT USE ANY PART NUMBER SHOWN ON THIS SCHEMATIC DIAGRAM FOR ORDERING. WHEN YOU ORDER A PART, PLEASE REFER TO PARTS LIST.

9 | 10 | 11

DECODER PACK C.B.A.			
Transistor		**Adjustment**	
Q7301	B-2	T7301	C-2
Q7304	B-2	T7302	A-3
Q7305	C-2	T7303	A-4
Q7306	A-1	T7304	C-1
Q7307	A-1	T7305	C-1
Transistor & Resistor		VR7301	A-3
QR7301	B-1	VR7326	C-4
QR7302	B-1	VR7328	C-3
QR7312	B-4	VR7340	A-4
QR7313	B-4	VR7342	B-2
QR7314	B-4	VR7344	A-2
QR7315	B-4	**Connector**	
QR7316	B-4	PS7301	A-1
QR7317	B-1	PS7302	A-3
Integrated Circuit			
IC7301	B-3		
IC7302	C-1		
IC7303	B-1		

ADDRESS INFORMATION

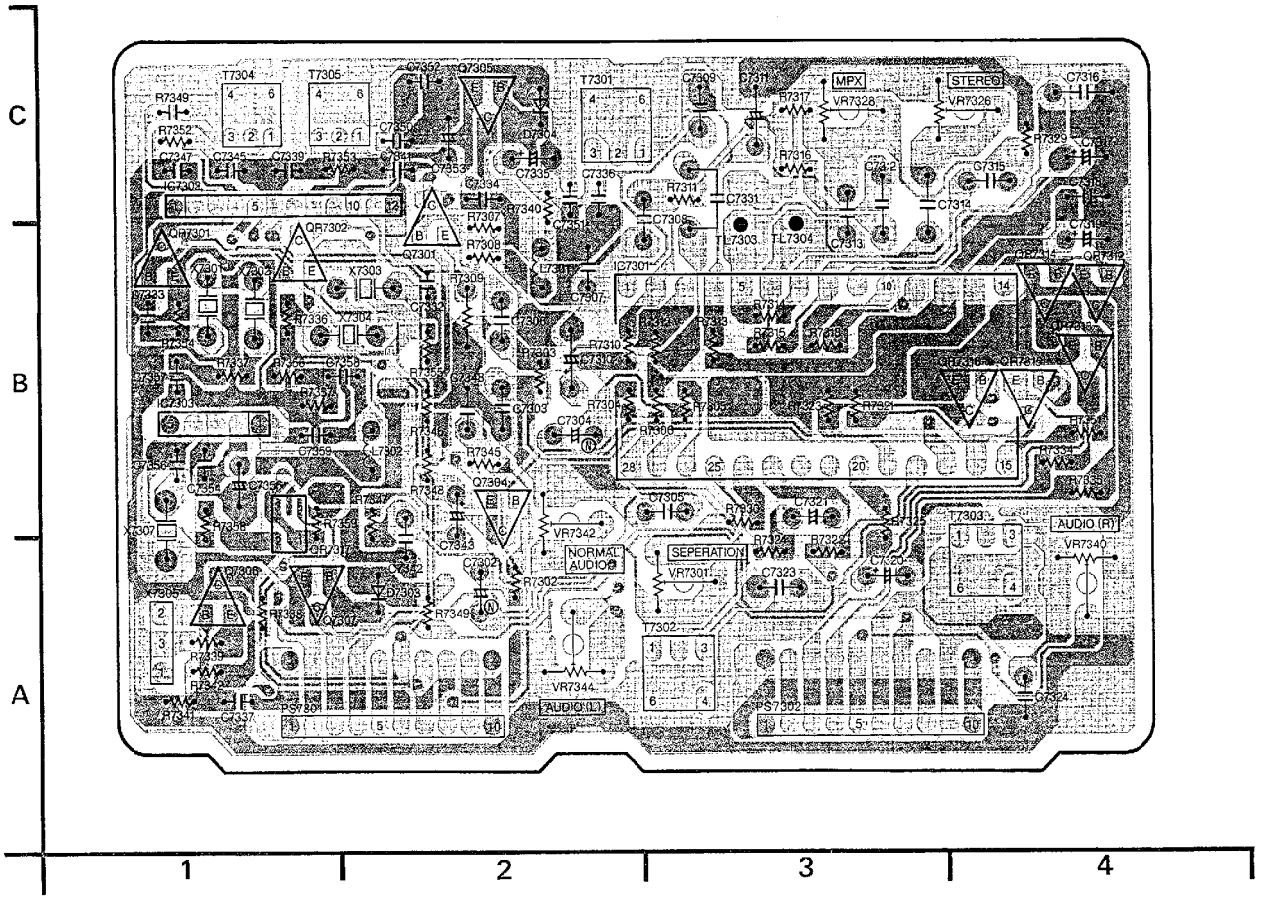

1 | 2 | 3 | 4

4-23 TV DEMODULATOR PACK SCHEMATIC DIAGRAM (NV-HD70AM, HD77AM)

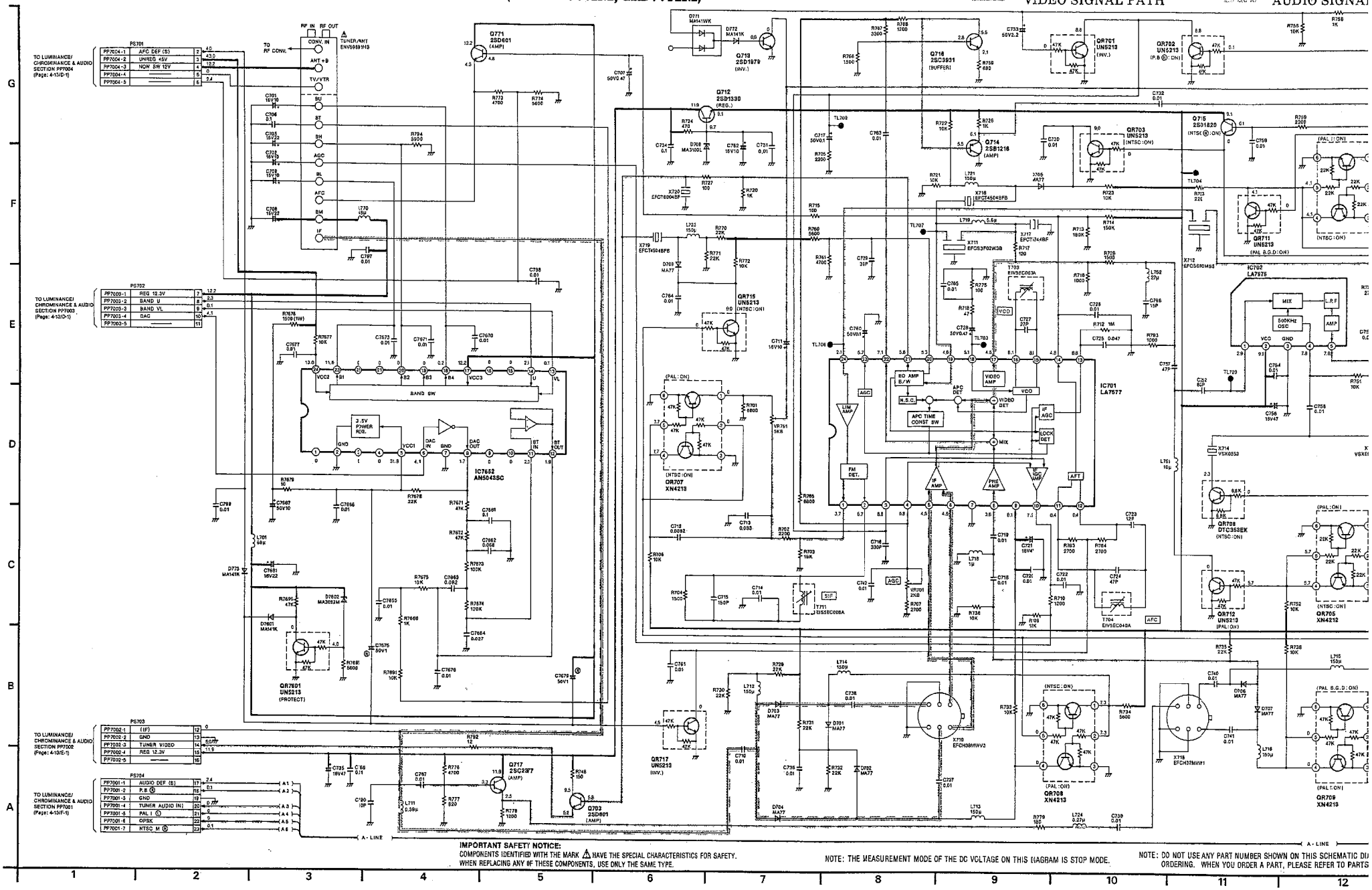

IMPORTANT SAFETY NOTICE:
COMPONENTS IDENTIFIED WITH THE MARK ⚠ HAVE THE SPECIAL CHARACTERISTICS FOR SAFETY. WHEN REPLACING ANY OF THESE COMPONENTS, USE ONLY THE SAME TYPE.

NOTE: THE MEASUREMENT MODE OF THE DC VOLTAGE ON THIS DIAGRAM IS STOP MODE.

NOTE: DO NOT USE ANY PART NUMBER SHOWN ON THIS SCHEMATIC DIA ORDERING. WHEN YOU ORDER A PART, PLEASE REFER TO PARTS

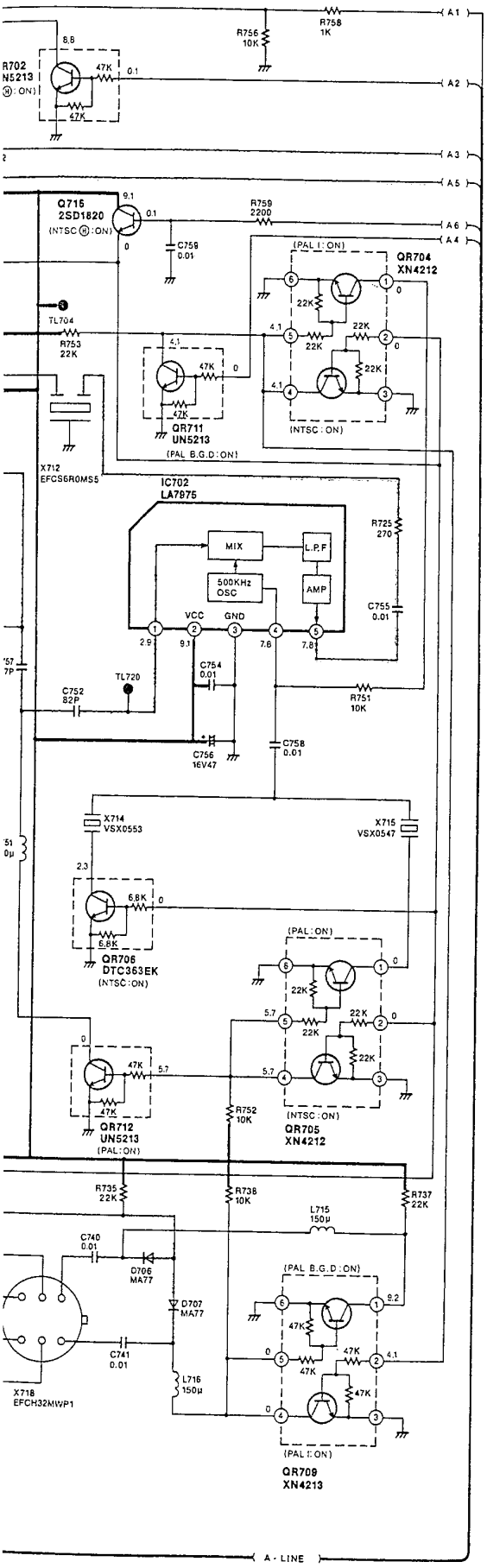

) NOT USE ANY PART NUMBER SHOWN ON THIS SCHEMATIC DIAGRAM FOR
IDERING. WHEN YOU ORDER A PART, PLEASE REFER TO PARTS LIST.

11 | 12

4-24. TV DEMODULATOR PACK C B A

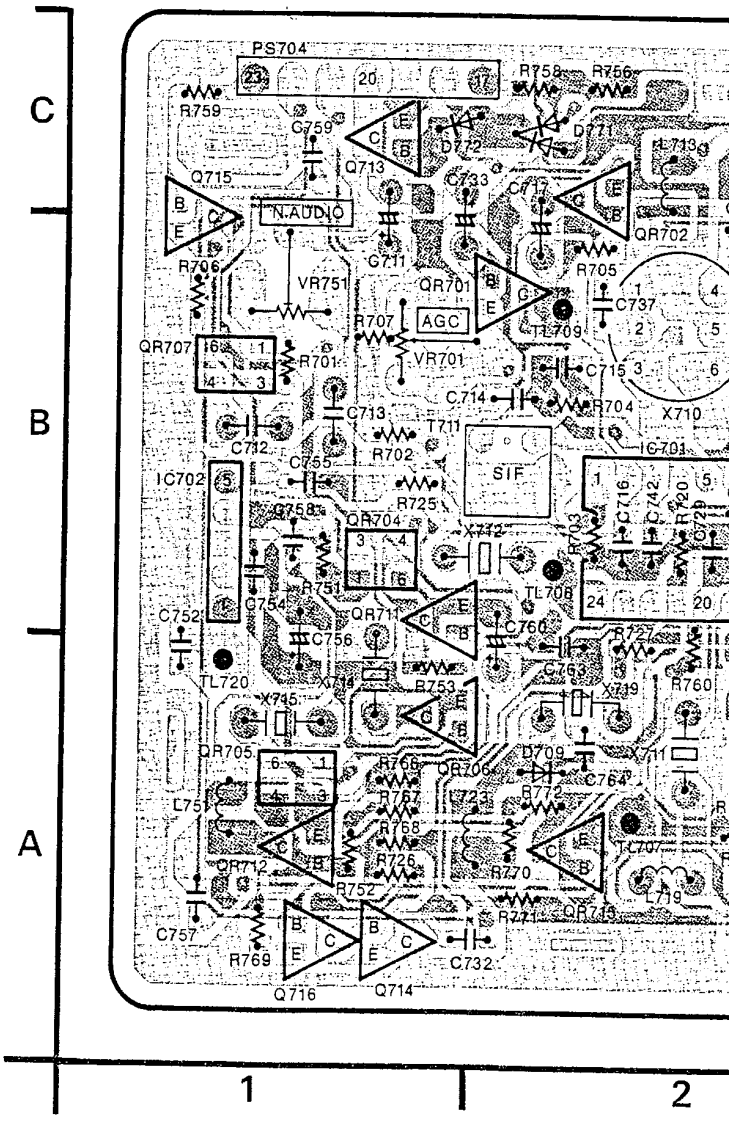

4-24. TV DEMODULATOR PACK C B A (VEP07723F: NV-HD70AM, HD77AM)

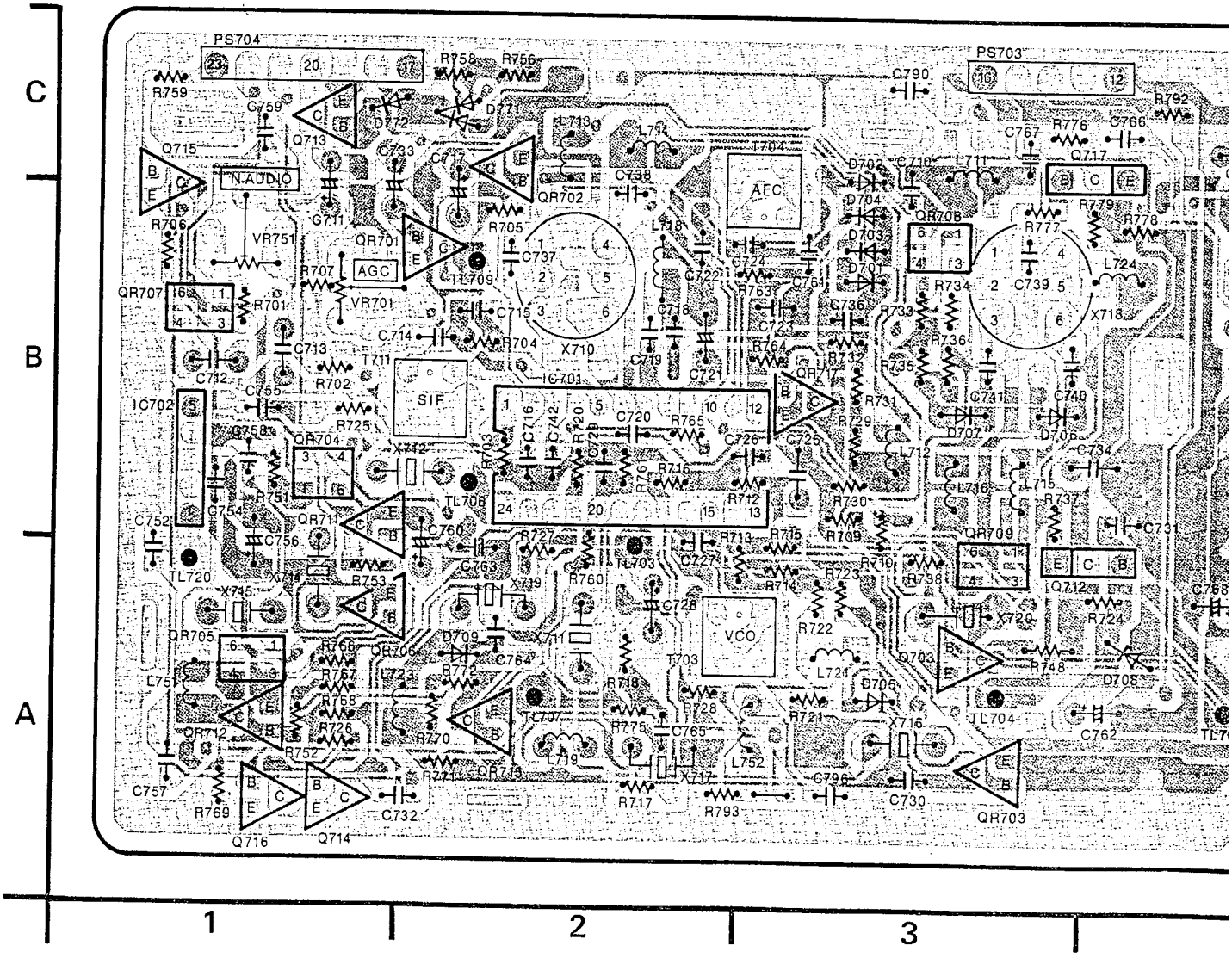
C
B
A
1
2
3
PS704
PS703
N.AUDIO
AGC
SIF
AFC
VCO
IC701
IC702
X710
X718
VR751
VR701
TL709
TL708
TL703
TL704
TL720
QR701
QR702
QR703
QR704
QR705
QR706
QR707
QR708
QR709
QR711
QR712
QR713
QR714
Q713
Q714
Q715
Q716
Q717
Q712
Q703
T704
T703
T711
T707
L711
L712
L713
L714
L718
L719
L721
L724
L752
D701
D702
D703
D704
D705
D706
D707
D708
D709
D771
D772
R759
R758
R756
R792
R776
R779
R778
R777
R734
R736
R735
R733
R731
R729
R730
R737
R738
R748
R724
R722
R723
R710
R714
R715
R713
R712
R716
R765
R763
R764
R760
R727
R728
R775
R721
R717
R793
R769
R768
R767
R766
R772
R771
R770
R726
R752
R753
R751
R725
R702
R707
R706
R705
R701
R704
R703
R720
R719
R742
R716
C790
C766
C767
C739
C740
C741
C734
C736
C737
C738
C724
C722
C721
C726
C725
C720
C719
C718
C717
C715
C714
C713
C712
C711
C710
C709
C708
C707
C706
C705
C704
C703
C702
C701
C759
C733
C732
C755
C758
C754
C756
C752
C757
C763
C764
C762
C761
C760
C796
C730
C728
C727
C768
C745
C744
C743
C746
C747
C748
C749
C750
C751
C753
C754
C755
C756
C757
C758
C759
C760
C761
C762
C763
C764
C765
C766
C767
C768
C769
C770
C771
C772
C773
C774
C775
C776
C777
C778
C779
C780
C781
C782
C783
C784
C785
C786
C787
C788
C789
C790
C791
C792

PACK C B A (VEP07723F: NV-HD70AM, HD77AM)

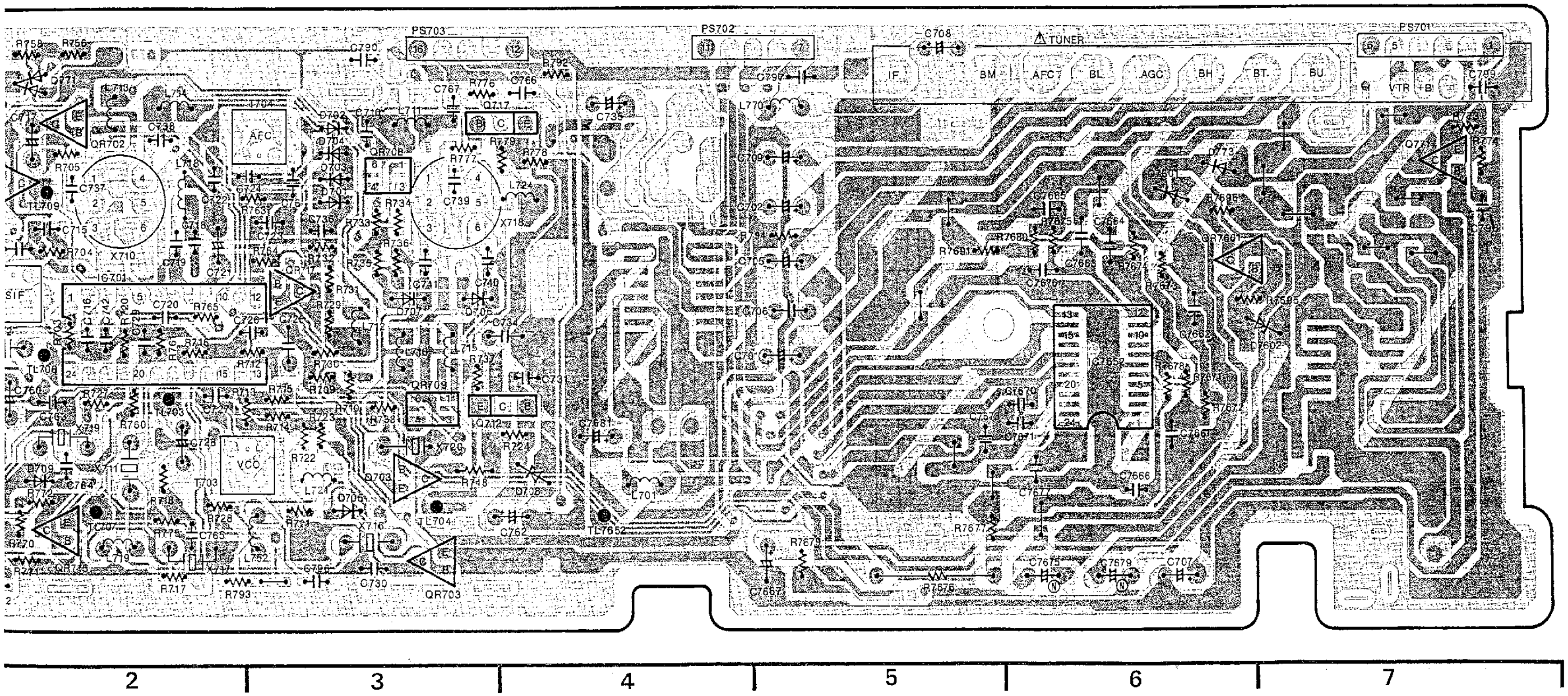

TV DEMODULATOR PACK C.B.A.	
Transistor	
Q703	A-3
Q712	A-3
Q713	C-1
Q714	A-1
Q715	C-1
Q716	A-1
Q717	C-3
Q771	B-7
Transistor & Resistor	
QR701	B-1
QR702	B-2
QR703	A-3
QR704	B-1
QR705	A-1
QR706	A-1
QR707	B-1
QR708	B-3
QR709	B-3
QR711	B-1
QR712	A-1
QR715	A-2
QR717	B-3
QR7601	B-6
Integrated Circuit	
IC701	B-2
IC702	B-1
IC7652	B-6
Adjustment	
T703	A-2
T704	C-3
T711	B-1
VR701	B-1
VR751	B-1
Connector	
PS701	C-7
PS702	C-4
PS703	C-3
PS704	C-1

ADDRESS INFORMATION

4-25. TV DEMODULATOR PACK SCHEMATIC DIAGRAM (NV-HD90EE)

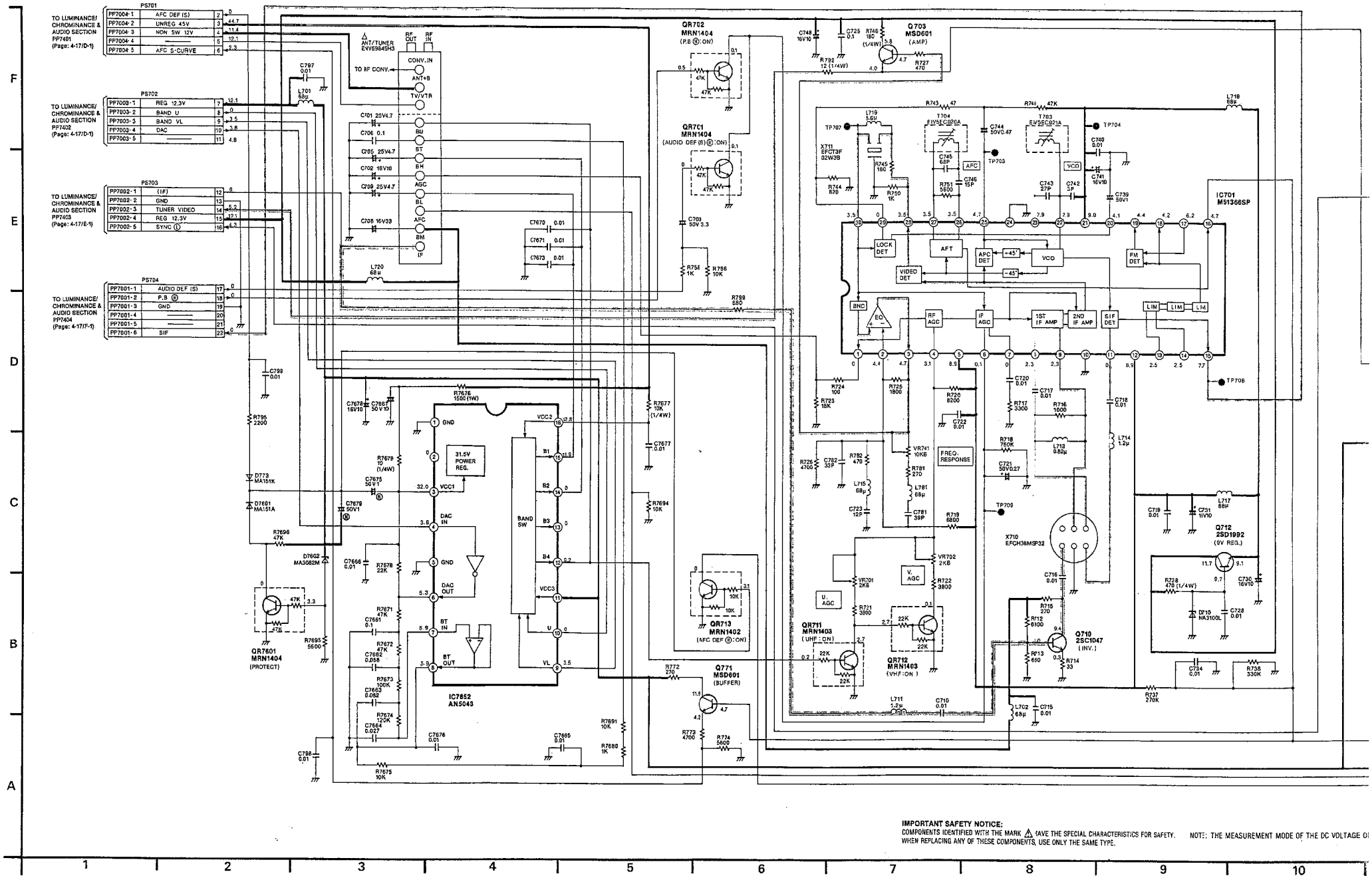

IMPORTANT SAFETY NOTICE:
COMPONENTS IDENTIFIED WITH THE MARK ⚠ HAVE THE SPECIAL CHARACTERISTICS FOR SAFETY. WHEN REPLACING ANY OF THESE COMPONENTS, USE ONLY THE SAME TYPE.

NOTE: THE MEASUREMENT MODE OF THE DC VOLTAGE O

4-26 TV DEMODUL

VIDEO SIGNAL PATH

AUDIO SIGNAL PATH

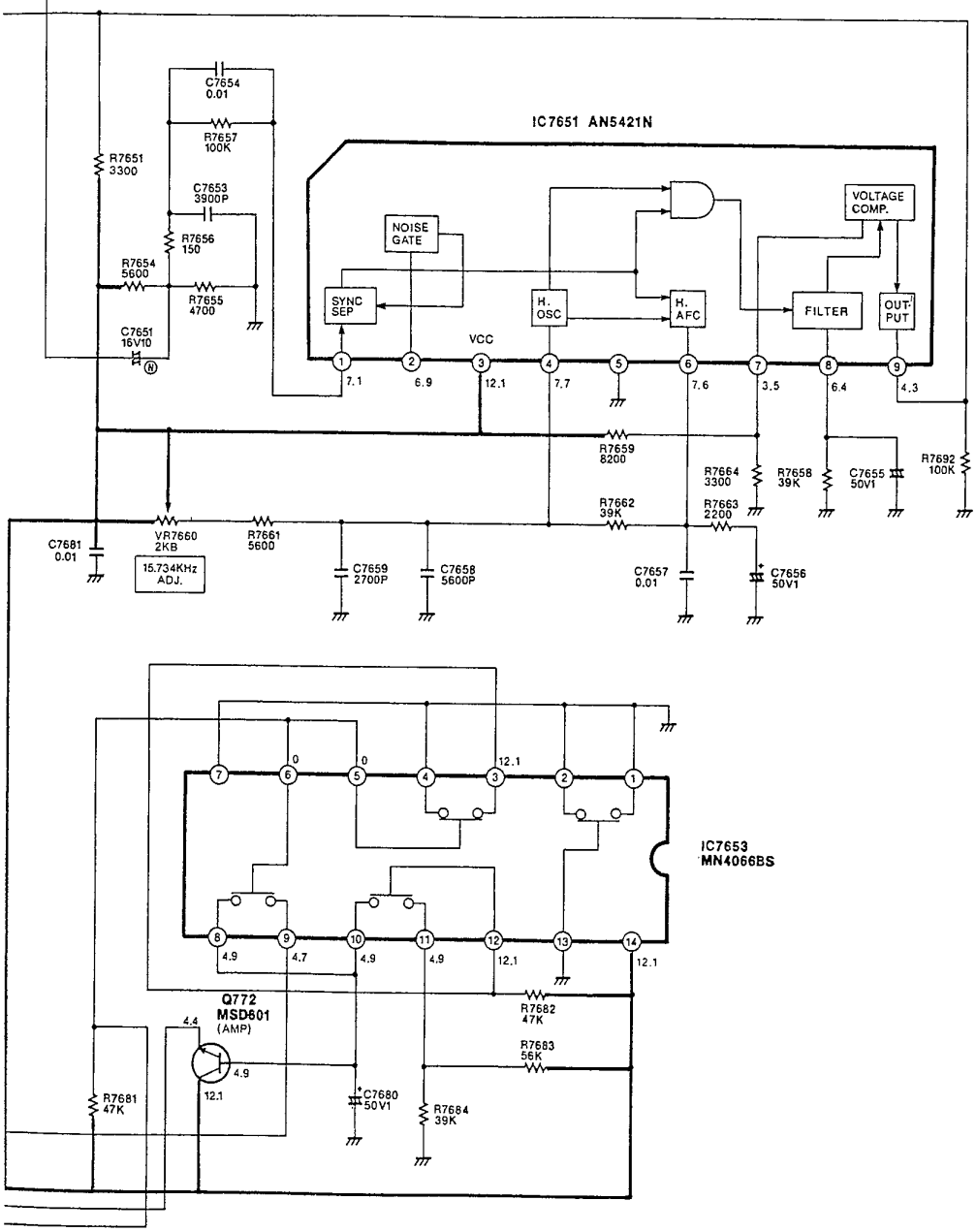

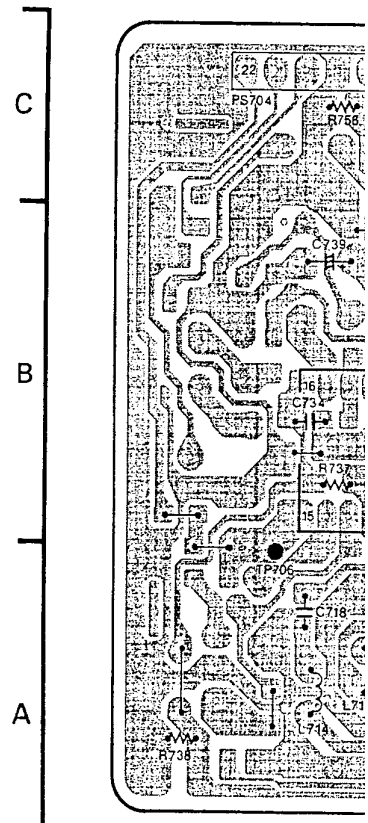

TAGE ON THIS DIAGRAM IS STOP MODE.

NOTE: DO NOT USE ANY PART NUMBER SHOWN ON THIS SCHEMATIC DIAGRAM FOR ORDERING. WHEN YOU ORDER A PART, PLEASE REFER TO PARTS LIST.

11 12 13 1

4-26 TV DEMODULATOR PACK C.B A. (VEP07645Z: NV-HD90EE)

TV DEMODULATOR PACK C.B.A.			
Transistor		**Test Point**	
Q703	B-4	TP703	C-3
Q710	A-2	TP704	C-2
Q712	C-3	TP706	A-1
Q771	A-6	TP707	B-2
Q772	B-6	TP709	B-3
Transistor & Resistor		**Adjustment**	
QR701	C-2	T703	B-2
QR702	C-2	T704	B-2
QR711	A-3	VR701	B-4
QR712	A-3	VR702	B-4
QR713	A-7	VR741	B-3
QR7601	B-6	VR7650	B-4
Integrated Circuit		**Connector**	
IC701	B-2	PS701	C-7
IC7651	B-4	PS702	C-4
IC7652	B-5	PS703	C-3
IC7653	B-7	PS704	C-1

ADDRESS INFORMATION

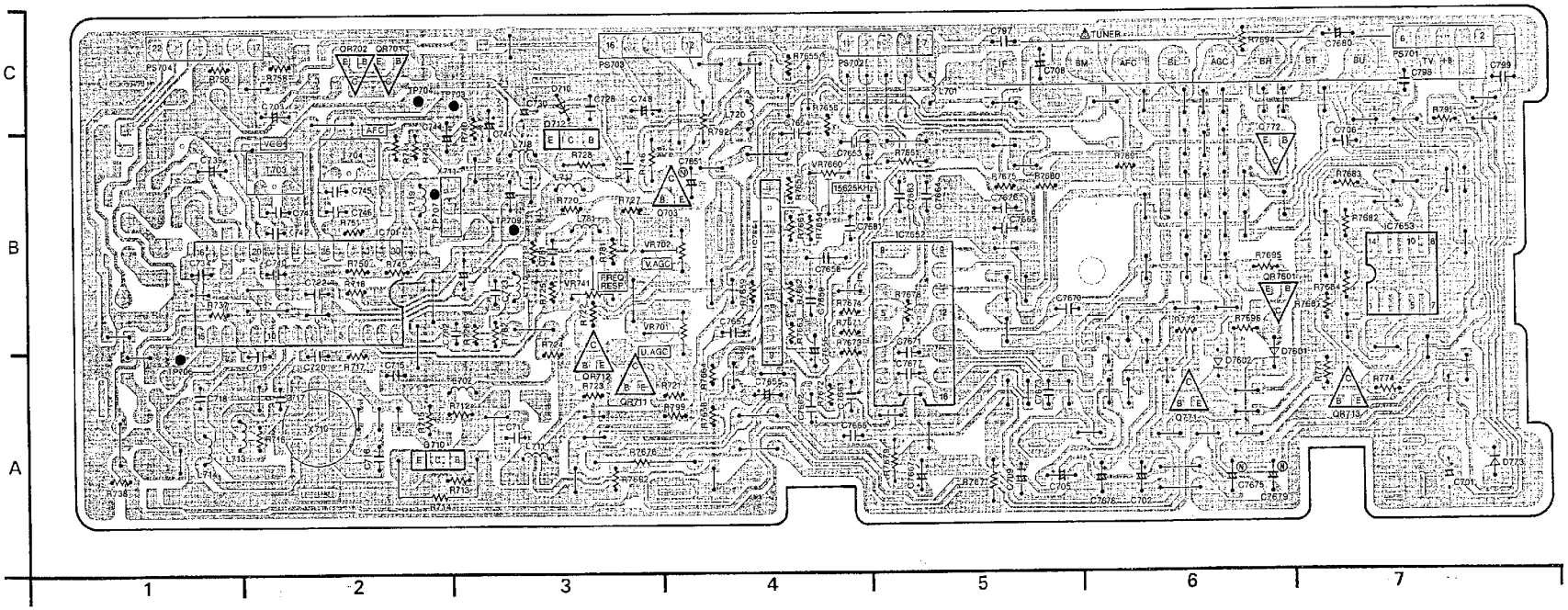

SECTION 5
EXPLODED VIEWS & PARTS LIST

5-1 EXPLODED VIEW & MECHANICAL REPLACEMENT PARTS LIST

❶ CHASSIS PARTS SECTION (1)

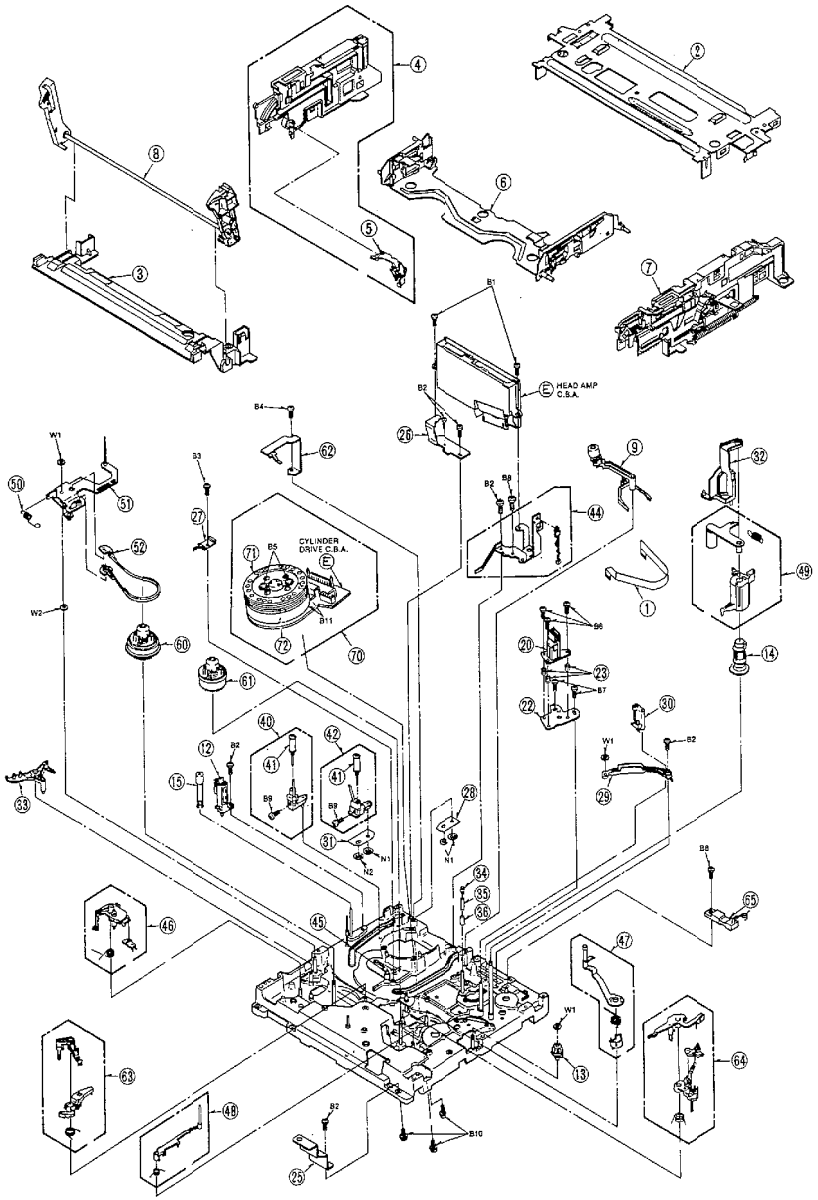

Note:1.* Be sure to make your orders of replacement parts according to this list.
2. IMPORTANT SAFETY NOTICE
Components identified with the mark ⟨!⟩ have the special characteristics for safety. When replacing any of these components,use only the same type.

Ref.No.		Part No.	Part Name & Description	Pcs	Remarks
1(1)		VWJ0743	FLEXIBLE CABLE (6P)	1	P4003-P1501
2(1)		VMA8644	TOP PLATE	1	
3(1)		VMA8707	CASSETTE GUIDE	1	
4(1)		VXA4660	SIDE PLATE (L) UNIT	1	
5(1)		VXL2250	OPENER LEVER UNIT	1	
6(1)		VXA4661	CASSETTE HOLDER PLATE UNIT	1	
7(1)		VXA4806	SIDE PLATE (R) UNIT	1	
8(1)		VXP1339	MAIN SHAFT UNIT	1	
9(1)		VXL2380	CLEANER ARM UNIT	1	
12(1)		VBS0050	PE HEAD	1	
13(1)		VDG0871	CARRIAGE CONNECTION GEAR	1	
14(1)		VDG0886	PINCH CAM GEAR	1	
15(1)		VXP1402	IMPEDANCE ROLLER UNIT	1	
20(1)		VEDO205	A/C HEAD (1) UNIT	1	
22(1)		VMA8624	A/C HEAD BASE	1	
23(1)		VMB2515	A/C HEAD SPRING	3	
25(1)		VMA8761	MOUNT ANGLE	1	
26(1)		VMA8763	HEAD AMP MOUNT ANGLE (L)	1	
27(1)		VMC0917	EARTH SPRING	1	
28(1)		VMA8874	INCLIND BASE HOLDER (S)	1	
29(1)		VMD2078	P5 STOPPER BASE	1	
30(1)		VXA4927	P5 POST STOPPER	1	
31(1)		VMA8873	INCLIND BASE HOLDER (T)	1	
32(1)		VMD2101	OPENER PIECE	1	
33(1)		VML2776	TENSION SPRING ARM	1	
34(1)		VMX1544	P4 UPPER LIMITER	1	
35(1)		VMX2175	P4 SLEEVE	1	
36(1)		VMX2176	P4 LOWER LIMITER	1	
40(1)		VXA5245KIT	INCLINED BASE (S) UNIT	1	
41(1)		VXP1415	ROLLER POST	2	
42(1)		VXA5247KIT	INCLINED BASE (T) UNIT	1	
44(1)		VXA5170	HEAD AMP MOUNT ANGLE (R) U.	1	
45(1)		VMS5383	CASSETTE POSITION FIXTURE	1	
46(1)		VXL2310	REVIEW ARM UNIT	1	
47(1)		VXL2306	P5 ARM UNIT	1	
48(1)		VXL2243	TAKE UP TENSION REGULATOR	1	
			ARM UNIT		
49(1)		VXL2246	PINCH ARM UNIT	1	
50(1)		VMB2434	TENSION SPRING	1	
51(1)		VXL2309	TENSION ARM (1) UNIT	1	
52(1)		VXZ0310	TENSION BAND UNIT	1	
60(1)		VXR0221	SUPPLY REEL TABLE UNIT	1	
61(1)		VXR0222	TAKE UP REEL TABLE UNIT	1	
62(1)		VXS0113	EARTH PLATE	1	
63(1)		VXZ0312	SUPPLY BRAKE ARM UNIT	1	
64(1)		VXZ0313	TAKE UP BRAKE ARM UNIT	1	
65(1)		2SB941PSW	POWER TRANSISTOR	1	
70(1)		VEG1113	CYLINDER UNIT	1	
71(1)		VEH0601	UPPER CYLINDER UNIT	1	
72(1)		VSC3940	CYLINDER SHIELD PLATE	1	
B1(1)		VHD0773	SCREW	2	
B2(1)		DTV26+5F	SCREW	6	
B3(1)		DTV26+4F	SCREW	1	
B4(1)		DTN3+6FEZ	SCREW	1	
B5(1)		VHD0553	SCREW	2	
B6(1)		VHD0762	SCREW	3	
B7(1)		DTV26+6EZ	SCREW	2	
B8(1)		DTV26+8F	SCREW	2	
B9(1)		DQN2+AJ4	SCREW	2	
B10(1)		VHD0342	SCREW	3	
B11(1)		DYWV0029	SCREW	2	
N1(1)		VHN0192	NUT	3	
N2(1)		VHN0193	NUT	1	
W1(1)		VMX2208	WASHER	3	
W2(1)		DWGV26D5G	WASHER	1	

Note:1.* Be sure to make your orders of replacement parts according to this list.
2. IMPORTANT SAFETY NOTICE
Components identified with the mark ⟨!⟩ have the special characteristics for safety. When replacing any of these components,use only the same type.

Ref.No.		Part No.	Part Name & Description	Pcs	Remarks
100(2)		VEG5927	STATOR UNIT	1	
101(2)		VBK0061	FG HEAD	1	
103(2)		VMA8930	ROTOR STOPPER	1	
104(2)		VMX1927	OIL SEAL	2	
105(2)		VXD0140	HOUSING UNIT	1	
106(2)		VXP1350	ROTOR UNIT	1	
107(2)		VXQ0297	THRUST SCREW UNIT	1	
108(2)		VDG0913	MAIN CAM GEAR	1	
109(2)		VDG0956	SUPPLY REEL GEAR	1	
110(2)		VDG0957	TAKE UP REEL GEAR	1	
111(2)		VDG0858	WORM WHEEL GEAR	1	
112(2)		VDG0885	SUB CAM GEAR	1	
113(2)		VDV0235	TIMING BELT	1	
120(2)		VDG0866	WORM GEAR	1	
121(2)		VEM0427	LOADING MOTOR (1) UNIT	1	
123(2)		VMD1942	MOTOR BRACKET	1	
126(2)		VML2725	IDLER CONTROL LEVER	1	
127(2)		VSS0365	MODE SW	1	
128(2)		VXA5138	SS BRAKE BASE UNIT	1	
129(2)		VXA4799	TENSION ROLLER UNIT	1	
140(2)		VXL2378	IDLER ARM UNIT	1	
141(2)		VXL2372	DIRECT LEVER UNIT	1	
142(2)		VXL2299	SUPPLY LOADING ARM UNIT	1	
143(2)		VXL2300	TAKE UP LOADING ARM UNIT	1	
144(2)		VXL2307	MAIN LEVER UNIT	1	
145(2)		VXP1409	CENTRE CLUTCH	1	
150(2)		VMD1926	LED HOLDER	1	
151(2)		VMD1927	PHOTO TRANSISTOR HOLDER	2	
152(2)		VES0695	SAFETY TAB SW	1	
153(2)		VJB00563	MECHANISM CONNECTION C.B.	1	ELECTRICAL PARTS ON
					THE C.B.A. IS LISTED
					ON ELECTRICAL PARTS
					LIST.
154(2)		VMD2029	REEL SHAFT GUIDE	1	
B101(2)		VHD0772	SCREW	4	
B102(2)		DTV26+8F	SCREW	1	
B103(2)		DTV26+6F	SCREW	3	
B104(2)		VHD0753	SCREW	4	
B105(2)		VHD0754	SCREW	1	
B106(2)		XSB26+4FZ	SCREW	1	
W101(2)		VMX2208	WASHER	4	

❷ CHASSIS PARTS SECTION (2)

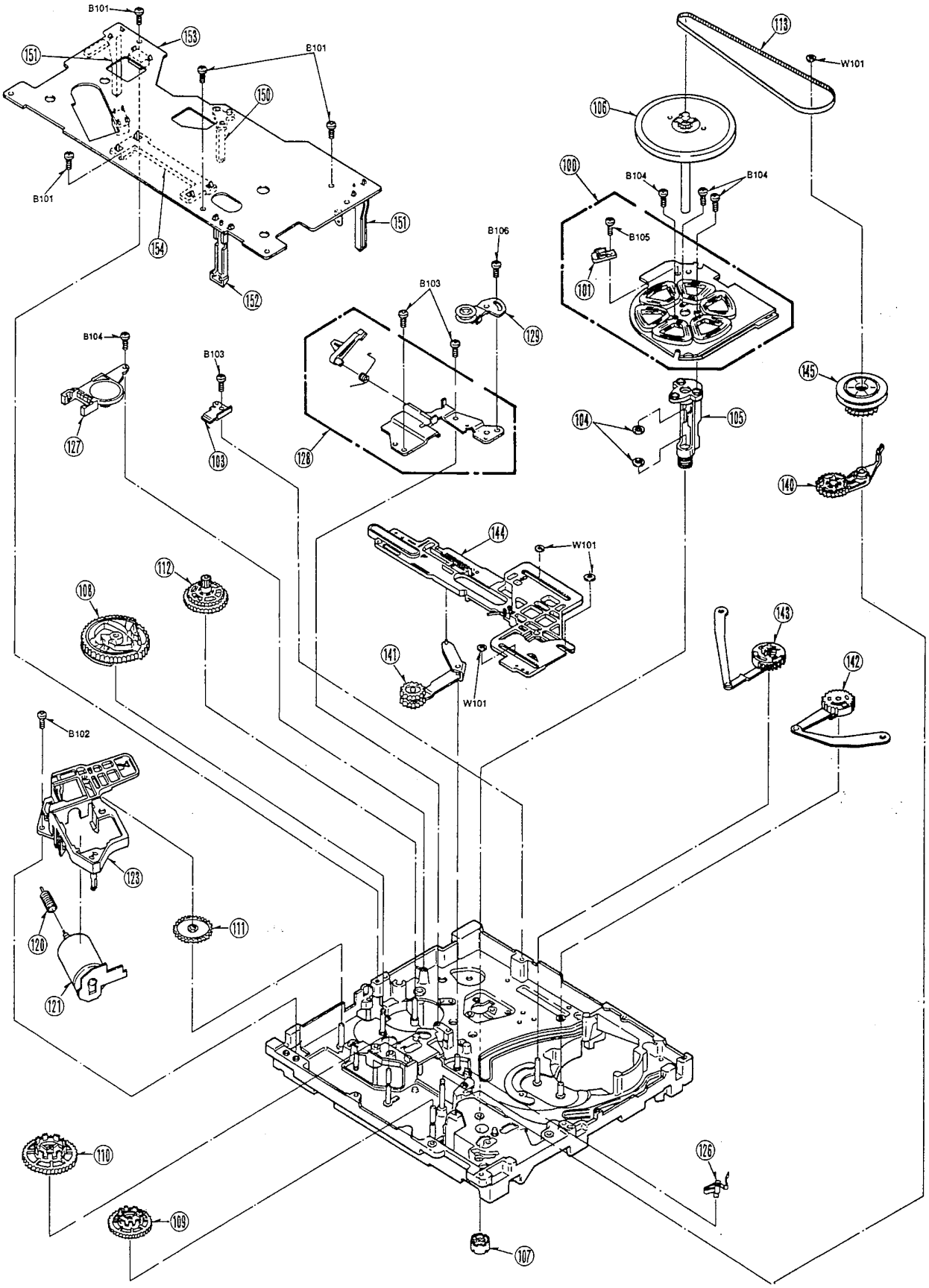

❸ CASING PARTS SECTION

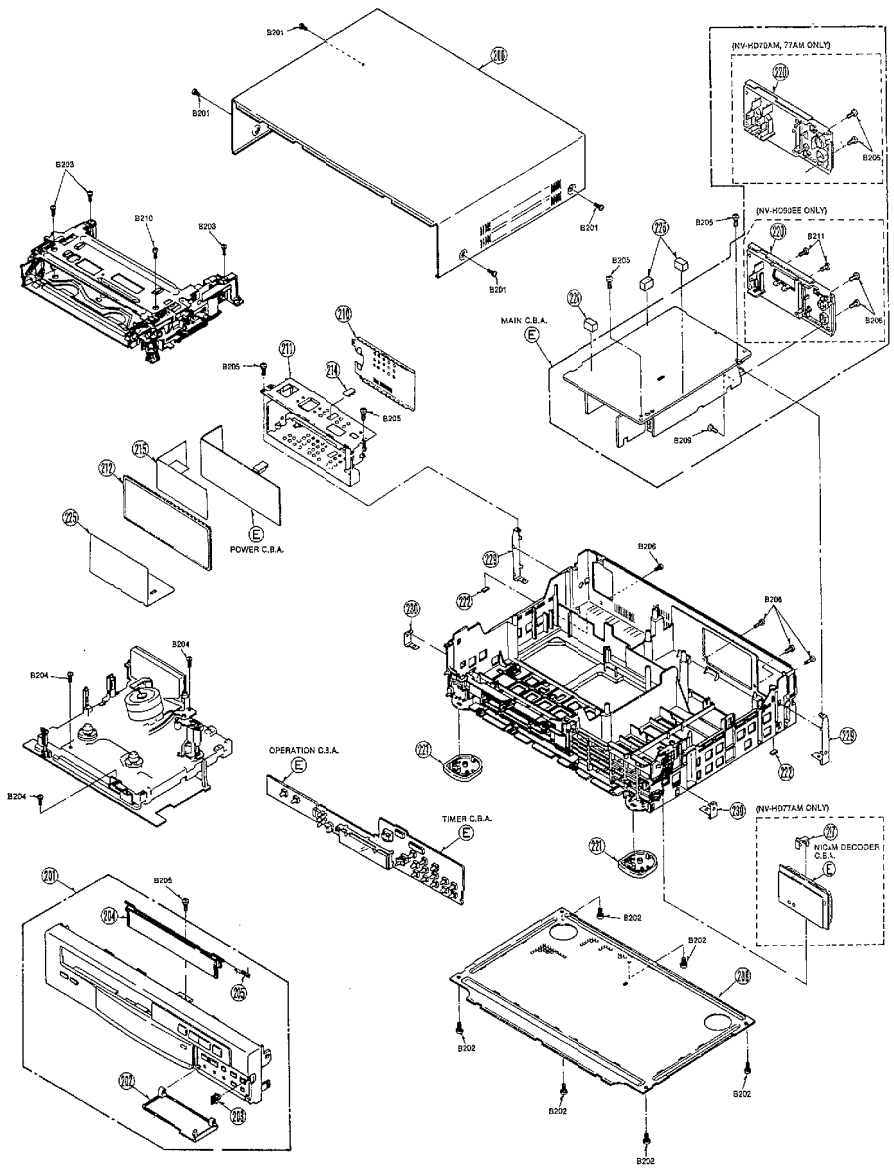

Note: 1.* Be sure to make your orders of replacement parts according to this list.
2. IMPORTANT SAFETY NOTICE
Components identified with the mark ⟨!⟩ have the special characteristics for safety. When replacing any of these components, use only the same type.

Ref.No.		Part No.	Part Name & Description	Pcs	Remarks
200(3)		VGM0980	TOP PANEL	1	
201(3)		VYP5610	FRONT PANEL UNIT	1	NV-HD70AM
201(3)		VYP5613	FRONT PANEL UNIT	1	NV-HD77AM
201(3)		VYP5612	FRONT PANEL UNIT	1	NV-HD90EE
202(3)		VKF2206	DOOR PANEL	1	NV-HD70AM
202(3)		VKF2208	DOOR PANEL	1	NV-HD77AM
202(3)		VKF2207	DOOR PANEL	1	NV-HD90EE
203(3)		VXQ0550	DOOR LOCK PIECE	1	
204(3)		VKF2131	BLINDER PANEL	1	NV-HD70AM/HD77AM
204(3)		VKF2123	BLINDER PANEL	1	NV-HD90EE
205(3)		VMB2521	BLINDER SPRING	1	
208(3)		VKU0374	BOTTOM PLATE	1	
210(3)		VSC3110	POWER SHIELD COVER (TOP)	1	
211(3)		VXA3571	POWER SHIELD COVER (MAIN)	1	
212(3)		VSC2237	POWER SHIELD COVER (BOTTOM)	1	
214(3)		VMC0357	IC HOLDER SPRING	1	
215(3)		VMZ2271	POWER BARRIER	1	⟨!⟩
220(3)		VJH0756	I/O JACK PLATE	1	NV-HD70AM/HD77AM
220(3)		VJH0740	I/O JACK PLATE	1	NV-HD90EE
221(3)		VKA0154	LEG	2	NV-HD70AM/HD77AM
221(3)		VKA0157	LEG	2	NV-HD90EE
222(3)		VKA0122	FOOT	2	
225(3)		VMZ2213	SHIELD BARRIER	1	
226(3)		VMT0506	MAIN C.B.A. SPACER	3	
227(3)		VGQ1362	NICAM HOLDER	1	NV-HD77AM
229(3)		VMP3820	SIDE ANGLE (REAR)	2	
230(3)		VMP3821	SIDE ANGLE (FRONT)	2	
B201(3)		XTW3+10TFZ	SCREW	4	
B202(3)		VHD0059	SCREW	6	
B203(3)		XTV26+8FR	SCREW	3	
B204(3)		VHD0168	SCREW	3	
B205(3)		VRD0773	SCREW	5	
B206(3)		XTV3+12JFZ	SCREW	6	
B209(3)		XTV3+6F	SCREW	1	
B210(3)		XTV26+10F	SCREW	1	
B211(3)		XTN4+10JFZ	SCREW	2	NV-HD90EE

Note: 1.* Be sure to make your orders of replacement parts according to this list.
2. IMPORTANT SAFETY NOTICE
Components identified with the mark ⟨!⟩ have the special characteristics for safety. When replacing any of these components, use only the same type.

Ref.No.		Part No.	Part Name & Description	Pcs	Remarks
300(4)		VQT5598	OPERATING INSTRUCTIONS	1	⟨!⟩NV-HD70AM
			(ENGLISH/ARABIC/RUSSIAN)		
300(4)		VQT5778	OPERATING INSTRUCTIONS	1	⟨!⟩NV-HD77AM
			(ENGLISH)		
300(4)		VQT5603	OPERATING INSTRUCTIONS	1	⟨!⟩NV-HD90EE
			(ENGLISH/GERMAN)		
300(4)		VQT5604	OPERATING INSTRUCTIONS	1	⟨!⟩NV-HD90EE
			(POLISE/RUSSIAN)		
302(4)		VJA0376	DIN RF CABLE	1	
303(4)		VJA0713	AC CORI	1	⟨!⟩NV-HD70AM/HD77AM
303(4)		VJA0664	AC CORI	1	⟨!⟩NV-HD90EE
305(4)		VEQ1574	REMOTE CONTROLLER	1	
307(4)		VJF2974	AC PLUG ADAPTOR	1	⟨!⟩NV-HD70AM/HD77AM
308(4)		VSQ0662	SEPARATION ADAPTOR	1	NV-HD70AM/HD77AM
310(4)		VGF3632	DOOR PANEL	1	
311(4)		VKF2115	BATTERY COVER	1	
315(4)		VPK0634	ACCESSCRIES PACKING	1	
318(4)		VPN3555	CUSHION (R)	1	
319(4)		VPN3556	CUSHION (L)	1	
320(4)		VPG7388	PACKING	1	NV-HD70AM
320(4)		VPG7537	PACKING	1	NV-HD77AM
320(4)		VPG7387	PACKING	1	NV-HD90EE
			SERVICE FIXTURES & TOOLS		
		VFJ8125H3F	VHS ALIGNMENT TAPE(PAL)	1	
		VFK0335	RETAINING RING REMOVER	1	
			(3mm/4mm)		
		VFK0329	POST ADJUSTMENT SCREWDRIVER	1	
		VFK0326	HEX WRENCH SET	1	
		VFK0132	BACK TENSION METER	1	
		VFK27	HEAD CLEANING STICK	1	
		MOR265	MORLYTONE GREASE	1	
		VFK0341	UPPER CYLINDER REMOVER	1	
		VFK0680	WHITE GREASE	1	
		VFK0851	CENTRE FIXING TOOL	1	
		VFK0330	FINE ADJUSTMENT GEAR DRIVER	1	
		VFK0690	6 PIN EXTENTION CABLE	1	
		VFK0944	5 PIN EXTENTION CABLE	3	

❹ PACKING PARTS SECTION

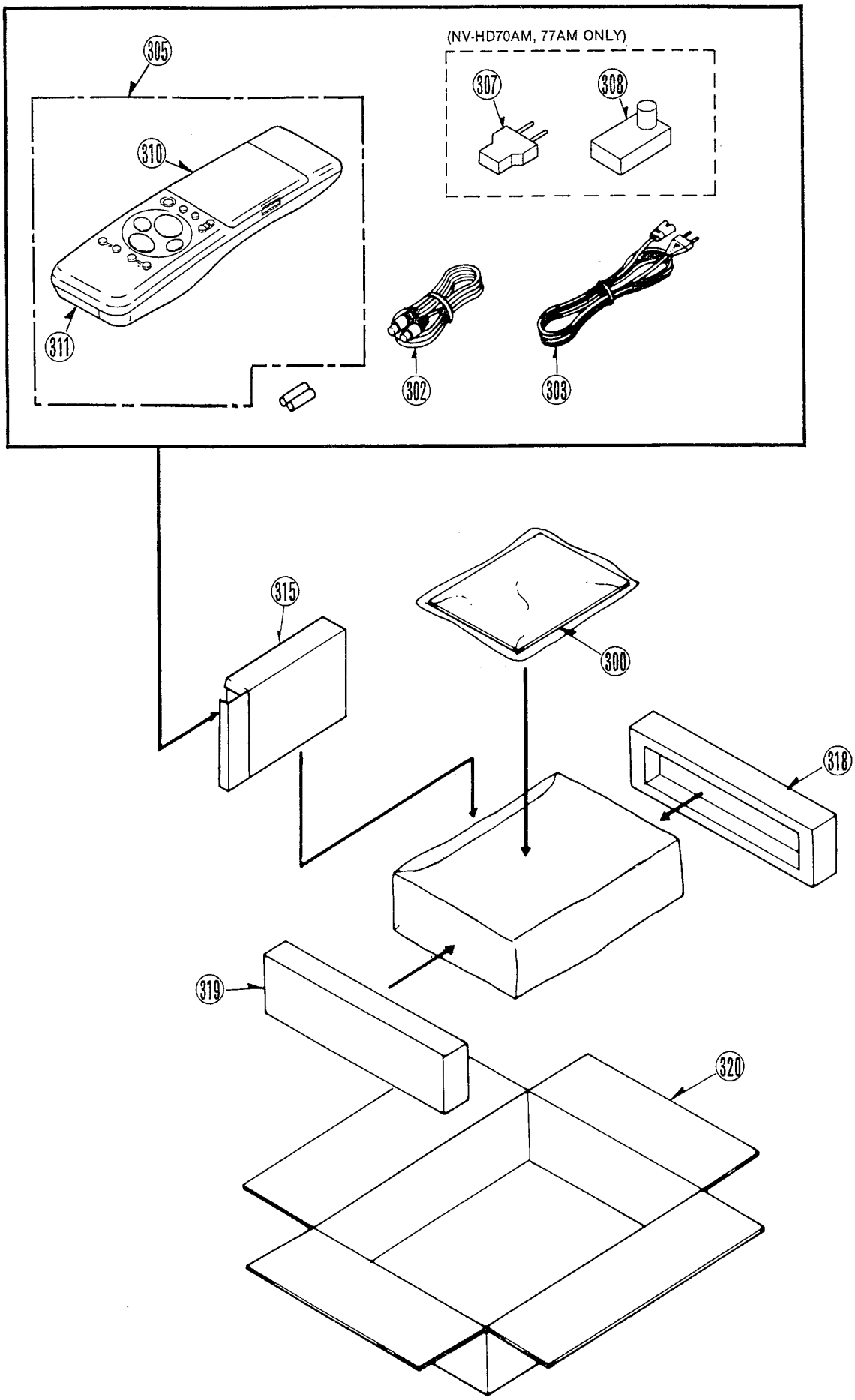

5-2 ELECTRICAL REPLACEMENT PARTS LIST

Note:1.Be sure to make your orders of replacement parts according to this list.
2.IMPORTANT SAFETY NOTICE : Components identified with the mark <!> have the special characteristics for safety. When replacing any of these components,use only the same type.
3.Unless otherwise specified,
All resistors are in OHMS , K=1,000 OHMS. All capacitors are in MICRO-FARADS(uf),P=uuF.
4.The P.C.Board units marked width'▮'show below the main assembled parts.
5.The marking(RTL) indicates the retention time is limited for this item. After the discontinuation of this assembly in production, it will no longer be available.

Ref.No.		Part No.	Part Name & Description	Pcs	Remarks
**********		NV-HD70AM			
		NV-HD77AM			
		NV-HD90EE			
		VEP03A88J	MAIN C.B.A.	1	(RTL)NV-HD70AM
			(Page:5-8)		INCLUDING THE
					LUMINANCE &
					CHROMINANCE PACK
					C.B.A.(VEP03975C),
					Hi-Fi AUDIO PACK
					C.B.A.(VEP04447PJ),
					TV DEMODULATOR PACK
					C.B.A.(VEP07723F),
					DECORDER PACK C.B.A.
					(VEP07725A).
		VEP03975C	LUMINANCE & CHROMINANCE	1	(RTL)NV-HD70AM
			PACK C.B.A.		INCLUDED IN MAIN
					C.B.A.(VEP03A88J).
					INDLUDING THE NTSC
					REC PACK C.B.A.
					(VEP03888C).
		VEP03888C	NTSC REC PACK C.B.A.	1	(RTL)NV-HD70AM
					INCLUDED IN
					LUMINANCE &
					CHROMINANCE PACK
					C.B.A.(VEP03975C).
		VEP04447PJ	Hi-Fi AUDIO PACK C.B.A.	1	(RTL)NV-HD70AM
					INCLUDED IN MAIN
					C.B.A.(VEP03A88J).
		VEP07723F	TV DEMODULATOR PACK C.B.A.	1	(RTL)NV-HD70AM
					INCLUDED IN MAIN
					C.B.A.(VEP03A88J).
		VEP07725A	DECORDER PACK C.B.A.	1	(RTL)NV-HD70AM
					INCLUDED IN MAIN
					C.B.A.(VEP03A88J).
		VEP03A88L	MAIN C.B.A.	1	(RTL)NV-HD77AM
			(Page:5-14)		INCLUDING THE
					LUMINANCE &
					CHROMINANCE PACK
					C.B.A.(VEP03975C),
					Hi-Fi AUDIO PACK
					C.B.A.(VEP04447PJ),
					TV DEMODULATOR PACK
					C.B.A.(VEP07723F),
					DECORDER PACK C.B.A.
					(VEP07725B).
		VEP03975C	LUMINANCE & CHROMINANCE	1	(RTL)NV-HD77AM
			PACK C.B.A.		INCLUDED IN MAIN
					C.B.A.(VEP03A88L).
					INCLUDING THE NTSC
					REC C.B.A.
					(VEP03888C).
		VEP03888C	NTSC REC C.B.A.	1	(RTL)NV-HD77AM
					INCLUDED IN
					LUMINANCE &
					CHROMINANCE PACK
					C.B.A.(VEP03975C).
		VEP04447PJ	Hi-Fi AUDIO PACK C.B.A.	1	(RTL)NV-HD77AM

Ref.No.		Part No.	Part Name & Description	Pcs	Remarks
					INCLUDED IN MAIN
					C.B.A.(VEP03A88L).
		VEP07723F	TV DEMODULATOR PACK C.B.A.	1	(RTL)NV-HD77AM
					INCLUDED IN MAIN
					C.B.A.(VEP03A88L).
		VEP07725B	DECORDER PACK C.B.A.	1	(RTL)NV-HD77AM
					INCLUDED IN MAIN
					C.B.A.(VEP03A88L).
		VEP03A88H	MAIN C.B.A.	1	(RTL)NV-HD90EE
			(Page:5-21)		INCLUDING THE
					LUMINANCE &
					CHROMINANCE PACK
					C.B.A.(VEP03975F),
					Hi-Fi AUDIO PACK
					C.B.A.(VEP04447PH),
					TV DEMODULATOR PACK
					C.B.A.(VEP07645Z),
					DECORDER PACK C.B.A.
					(VEP07743A).
		VEP03975F	LUMINANCE & CHROMINANCE	1	(RTL)NV-HD90EE
			PACK C.B.A.		INCLUDED IN MAIN
					C.B.A.(VEP03A88H).
					INCLUDING THE DDR
					C.B.A.(VEP03A02A).
		VEP03A02A	DDR C.B.A.	1	(RTL)NV-HD90EE
					INCLUDED IN
					LUMINANCE &
					CHROMINANCE PACK
					C.B.A.(VEP03975F).
		VEP04447PH	Hi-Fi AUDIO PACK C.B.A.	1	(RTL)NV-HD90EE
					INCLUDED IN MAIN
					C.B.A.(VEP03A88H).
		VEP07645Z	TV DEMODULATOR PACK C.B.A.	1	(RTL)NV-HD90EE
					INCLUDED IN MAIN
					C.B.A.(VEP03A88H).
		VEP07743A	DECORDER PACK C.B.A.	1	(RTL)NV-HD90EE
					INCLUDED IN MAIN
					C.B.A.(VEP03A88H).
		VEX0128	CYLINDER DRIVE C.B.A.	1	(RTL)
			(Page:5-27)		
		VEP05176C	HEAD AMP C.B.A.	1	(RTL)
			(Page:5-28)		
		VEP06931B	OPERATION C.B.A.	1	(RTL)
			(Page:5-28)		
		VEP07675C	NICAM DECORDER C.B.A.	1	(RTL)NV-HD77AM
			(Page:5-28)		
		VEP07752N	TIMER C.B.A.	1	(RTL)NV-HD70AM
			(Page:5-29)		
		VEP07752Q	TIMER C.B.A.	1	(RTL)NV-HD77AM
			(Page:5-30)		
		VEP07752M	TIMER C.B.A.	1	(RTL)NV-HD90EE
			(Page:5-31)		
		VEP01587F	POWER C.B.A.	1	(RTL)<!>
			(Page:5-32)		NV-HD70AM/HD77AM
		VEP01587D	POWER C.B.A.	1	(RTL)<!>
			(Page:5-32)		NV-HD90EE
		----------	MECHANISM CONNECTION C.B.A.	1	NOT SUPPLIED AS

Ref.No.		Part No.	Part Name & Description	Pcs	Remarks
			(Page:5-33)		C.B.A. (C.B. IS
					LISTED ON MECHANICAL
					PARTS LIST)
		----------	MOTOR C.B.A.	1	C.B.A. IS INCLUDED
			(Page:5-33)		IN LOADING MOTOR (1)
					UNIT(VEM0427).
		ENC17992A	RF CONVERTER	1	<!>NV-HD70AM/HD77AM
		ENC17991A	RF CONVERTER	1	<!>NV-HD90EE
		ENV598B1H3	TUNER	1	<!>
F1101		XEA2C16TD0	FUSE	1	<!>
	■	VEF03A88J	MAIN C.B.A.		(RTL)NV-HD70AM
C305		ECUM1H470JCN	C.CAPACITOR CH 50V 47P	1	
C306,07		ECUM1H104ZFN	C.CAPACITOR CH 50V 0.1U	2	
C308		ECEA1EKN4R7	E.CAPACITOR 25V 4.7U	1	
C310		ECEA1CK220	E.CAPACITOR 16V 22U	1	
C311		ECEA0JK101	E.CAPACITOR 6.3V 100U	1	
C312		ECUM1H104ZFN	C.CAPACITOR CH 50V 0.1U	1	
C313,14		ECUM1H103ZFN	C.CAPACITOR CH 50V 0.01U	2	
C315		ECUM1H560JCN	C.CAPACITOR CH 50V 56P	1	
C319		ECEA0JK101	E.CAPACITOR 6.3V 100U	1	
C320		ECUM1H820JCN	C.CAPACITOR CH 50V 82P	1	
C321		ECUM1H333KBN	C.CAPACITOR CH 50V 0.033U	1	
C701,02		ECEA1CK100	E.CAPACITOR 16V 10U	2	
C705		ECEA1CK220	E.CAPACITOR 16V 22U	1	
C706		ECQV1H104JM	E.CAPACITOR 50V 0.1U	1	
C707		ECEA1HKR47	E.CAPACITOR 50V 0.47U	1	
C708		ECEA1CK220	E.CAPACITOR 16V 22U	1	
C709		ECEA1CK100	E.CAPACITOR 16V 10U	1	
C710		ECUX1H103ZFV	C.CAPACITOR CH 50V 0.01U	1	
C711		ECEA1CK100	E.CAPACITOR 16V 10U	1	
C712		ECQB1H822JH	P.CAPACITOR 50V 8200P	1	
C713		ECQV1H333JZ	P.CAPACITOR 50V 0.033U	1	
C714		ECUX1H103ZFV	C.CAPACITOR CH 50V 0.01U	1	
C715		ECUM1H151JCN	C.CAPACITOR CH 50V 150P	1	
C716		ECUM1H331JCN	C.CAPACITOR CH 50V 330P	1	
C717		ECEA1HK0R1	E.CAPACITOR 50V 0.1U	1	
C718-20		ECUX1H103ZFV	C.CAPACITOR CH 50V 0.01U	3	
C721		ECEA1CK470	E.CAPACITOR 16V 47U	1	
C722		ECUX1H103ZFV	C.CAPACITOR CH 50V 0.01U	1	
C723		ECUM1H120JCN	C.CAPACITOR CH 50V 12P	1	
C724		ECUM1H470JPN	C.CAPACITOR CH 50V 47P	1	
C725		ECQV1H473JZ	P.CAPACITOR 50V 0.047U	1	
C726		ECUX1H103ZFV	C.CAPACITOR CH 50V 0.01U	1	
C727		ECUM1H270JCN	C.CAPACITOR CH 50V 27P	1	
C728		ECEA1HKR47	E.CAPACITOR 50V 0.47U	1	
C729		ECUX1H390JCV	C.CAPACITOR CH 50V 39P	1	
C730-32		ECUX1H103ZFV	C.CAPACITOR CH 50V 0.01U	3	
C733		ECEA1HK2R2	E.CAPACITOR 50V 2.2U	1	
C734		ECQV1H104JM	P.CAPACITOR 50V 0.1U	1	
C735		ECEA1CK470	E.CAPACITOR 16V 47U	1	
C736-42		ECUX1H103ZFV	C.CAPACITOR CH 50V 0.01U	7	
C752		ECUX1H820JCV	C.CAPACITOR CH 50V 82P	1	
C754,55		ECUX1H103ZFV	C.CAPACITOR CH 50V 0.01U	2	
C756		ECEA1CK470	E.CAPACITOR 16V 47U	1	
C757		ECUX1H470JCV	C.CAPACITOR CH 50V 47P	1	
C758,59		ECUX1H103ZFV	C.CAPACITOR CH 50V 0.01U	2	
C760		ECEA1HK0R1	E.CAPACITOR 50V 0.1U	1	
C761		ECUX1H103ZFV	C.CAPACITOR CH 50V 0.01U	1	
C762		ECEA1CK100	E.CAPACITOR 16V 10U	1	
C763-67		ECUX1H103ZFV	C.CAPACITOR CH 50V 0.01U	5	
C790		ECUX1H100DCV	C.CAPACITOR CH 50V 10P	1	
C796		ECUX1H150JCV	C.CAPACITOR CH 50V 15P	1	

Ref.No.		Part No.	Part Name & Description	Pcs	Remarks
C797-99		ECUX1H103ZFV	C.CAPACITOR CH 50V 0.01U	3	
C805		ECEA0JK221	E.CAPACITOR 6.3V 220	1	
C806		ECUM1H104ZFN	C.CAPACITOR CH 50V 0.1U	1	
C807		ECUM1H181JCN	C.CAPACITOR CH 50V 180P	1	
C808		ECUM1H270JCN	C.CAPACITOR CH 50V 27P	1	
C809		ECUM1H103ZFN	C.CAPACITOR CH 50V 0.01U	1	
C812-14		ECUM1H103ZFN	C.CAPACITOR CH 50V 0.01U	3	
C815		ECUM1H560JCN	C.CAPACITOR CH 50V 56P	1	
C816		ECUM1H103ZFN	C.CAPACITOR CH 50V 0.01U	1	
C817		ECUM1H560JCN	C.CAPACITOR CH 50V 56P	1	
C818		ECUM1H103ZFN	C.CAPACITOR CH 50V 0.01U	1	
C819		ECUM1H470JCN	C.CAPACITOR CH 50V 47P	1	
C820-25		ECUM1H103ZFN	C.CAPACITOR CH 50V 0.01U	6	
C826		ECEA0JK101	E.CAPACITOR 6.3V 100U	1	
C827		ECUM1H103ZFN	C.CAPACITOR CH 50V 0.01U	1	
C828		ECUM1H470JCN	C.CAPACITOR CH 50V 47P	1	
C829		ECUM1H103ZFN	C.CAPACITOR CH 50V 0.01U	1	
C830		ECEA1HK0R1	E.CAPACITOR 50V 0.1U	1	
C831		ECQB1H332JH	P.CAPACITOR 50V 0.27U	1	
C832		ECUM1H331JCN	C.CAPACITOR CH 50V 330P	1	
C838		ECUM1H104ZFN	C.CAPACITOR CH 50V 0.1U	1	
C839		ECUM1H100DCN	C.CAPACITOR CH 50V 10P	1	
C841		ECUM1H102KBN	C.CAPACITOR CH 50V 1000P	1	
C842		ECEA0JK101	E.CAPACITOR 6.3V 100U	1	
C843		ECUM1H104ZFN	C.CAPACITOR CH 50V 0.1U	1	
C845		ECEA1HK010	E.CAPACITOR 50V 1U	1	
C846		ECUM1H103ZFN	C.CAPACITOR CH 50V 0.01U	1	
C848-50		ECUM1H103ZFN	C.CAPACITOR CH 50V 0.01U	3	
C1001		ECA1EM101	E.CAPACITOR 25V 100U	1	
C1002		ECEA1AFS221	E.CAPACITOR 10V 220U	1	
C1003		ECEA0JKA330	E.CAPACITOR 6.3V 33U	1	
C1004		ECEA1CKA330	E.CAPACITOR 16V 33U	1	
C1005		ECEA1CKA100	E.CAPACITOR 16V 10U	1	
C1006		ECUM1H103ZFN	C.CAPACITOR CH 50V 0.01U	1	
C2001		ECUM1H104ZFN	C.CAPACITOR CH 50V 0.1U	1	
C2002		ECUM1H103ZFN	C.CAPACITOR CH 50V 0.01U	1	
C2003		ECEA1CKA470	E.CAPACITOR 16V 47U	1	
C2004		ECEA1CKA101	E.CAPACITOR 16V 100U	1	
C2005,06		ECEA1HKNR47	E.CAPACITOR 50V 0.47U	2	
C2007		ECUM1H103ZFN	C.CAPACITOR CH 50V 0.01U	1	
C2008		ECEA1HKA2R2	E.CAPACITOR 50V 2.2U	1	
C2009,10		ECUM1H680JCN	C.CAPACITOR CH 50V 68P	2	
C2011,12		ECUM1H333KBN	C.CAPACITOR CH 50V 0.033U	2	
C2013		ECQV1H334JM	P.CAPACITOR 50V 0.33U	1	
C2014		ECUM1H333KBN	C.CAPACITOR CH 50V 0.033U	1	
C2015,16		ECEA1HKA2R2	E.CAPACITOR 50V 2.2U	2	
C2017		ECEA1HKAR22	E.CAPACITOR 50V 0.22U	1	
C2018,19		ECUM1H333KBN	C.CAPACITOR CH 50V 0.033U	2	
C2020		ECUM1H103ZFN	C.CAPACITOR CH 50V 0.01U	1	
C2021		ECA0JM221	E.CAPACITOR 6.3V 220U	1	
C2022		ECEA1CKA470	E.CAPACITOR 16V 47U	1	
C2023		ECUM1H104ZFN	C.CAPACITOR CH 50V 0.1U	1	
C2024		ECEA1CKA100	E.CAPACITOR 16V 10U	1	
C2025,26		ECUM1C105ZFN	C.CAPACITOR CH 16V 1U	2	
C2027		ECEA1HKA3R3	E.CAPACITOR 50V 3.3U	1	
C2028		ECEA1HKN3R3	E.CAPACITOR 50V 3.3U	1	
C2029		ECUM1H471JCN	C.CAPACITOR CH 50V 470P	1	
C2030		ECUM1H222KBN	C.CAPACITOR CH 50V 2200P	1	
C2031		ECUM1H392KBN	C.CAPACITOR CH 50V 3900P	1	
C2032		ECUM1H223KBN	C.CAPACITOR CH 50V 0.022U	1	
C2033		ECA0JM221	E.CAPACITOR 6.3V 220U	1	
C2034		ECEA1CKA100	E.CAPACITOR 16V 10U	1	
C2035		ECEA1HKA3R3	E.CAPACITOR 50V 3.3U	1	
C2036		ECEA0JKA220	E.CAPACITOR 6.3V 22U	1	
C2037		ECUM1H103ZFN	C.CAPACITOR CH 50V 0.01U	1	
C2038		ECUM1H104ZFN	C.CAPACITOR CH 50V 0.1U	1	
C2039		ECEA1HKA4R7	E.CAPACITOR 50V 4.7U	1	
C2040		ECUM1H222KBN	C.CAPACITOR CH 50V 2200P	1	
C2041		ECUM1H333KBN	C.CAPACITOR CH 50V 0.033U	1	
C2042		ECQV1H683JM	P.CAPACITOR 50V 0.068U	1	
C2043		ECEA1CKA470	E.CAPACITOR 16V 47U	1	
C2044		ECEA1HKA010	E.CAPACITOR 50V 1U	1	
C2045		ECEA1CKA470	E.CAPACITOR 16V 47U	1	
C2046		ECEA1HKAR47	E.CAPACITOR 50V 0.47U	1	
C2047		ECQV1H683JM	P.CAPACITOR 50V 0.068U	1	

Ref.No.		Part No.	Part Name & Description	Pcs	Remarks
C2048		ECEA1CKA470	E.CAPACITOR 16V 47U	1	
C2049		ECEA0JKA470	E.CAPACITOR 6.3V 47U	1	
C2050		ECUM1H101JCN	C.CAPACITOR CH 50V 100P	1	
C2051		ECUM1H104ZFN	C.CAPACITOR CH 50V 0.1U	1	
C2052		ECA0JM101	E.CAPACITOR 6.3V 100P	1	
C3001		ECUM1H102KBN	C.CAPACITOR CH 50V 1000P	1	
C3002,03		ECUM1H104ZFN	C.CAPACITOR CH 50V 0.1U	2	
C3004		ECUM1H103ZFN	C.CAPACITOR CH 50V 0.01U	1	
C3005		ECUM1H104ZFN	C.CAPACITOR CH 50V 0.1U	1	
C3006		ECUM1H103ZFN	C.CAPACITOR CH 50V 0.01U	1	
C3007		ECEA0JKA221	E.CAPACITOR 6.3V 220U	1	
C3008		ECEA1CKA100	E.CAPACITOR 16V 10U	1	
C3009		ECUM1H103ZFN	C.CAPACITOR CH 50V 0.01U	1	
C3010		ECEA0JKA470	E.CAPACITOR 6.3V 47U	1	
C3011		ECUM1H103ZFN	C.CAPACITOR CH 50V 0.01U	1	
C3012		ECUM1H620JCN	C.CAPACITOR CH 50V 62P	1	
C3013		ECUM1H330JCN	C.CAPACITOR CH 50V 33P	1	
C3014		ECUM1H680JCN	C.CAPACITOR CH 50V 68P	1	
C3015		ECUM1H220JCN	C.CAPACITOR CH 50V 22P	1	
C3016		ECUM1H151JCN	C.CAPACITOR CH 50V 150P	1	
C3017		ECUM1H103ZFN	C.CAPACITOR CH 50V 0.01U	1	
C3019		ECUM1H220JCN	C.CAPACITOR CH 50V 22P	1	
C3020		ECUM1H180JCN	C.CAPACITOR CH 50V 18P	1	
C3021		ECA0JM471	E.CAPACITOR 6.3V 470	1	
C3022		ECUM1H103ZFN	C.CAPACITOR CH 50V 0.01U	1	
C3023		ECEA1CKA470	E.CAPACITOR 16V 47U	1	
C3024		ECUM1H104ZFN	C.CAPACITOR CH 50V 0.1U	1	
C3025		ECEA0JKA470	E.CAPACITOR 6.3V 47U	1	
C3026,27		ECEA1CKA100	E.CAPACITOR 16V 10U	2	
C3028,29		ECUM1H332KBN	C.CAPACITOR CH 50V 3300P	2	
C3030		ECEA1CKA100	E.CAPACITOR 16V 10U	1	
C3031		ECUM1H102KBN	C.CAPACITOR CH 50V 1000P	1	
C3032		ECUM1H103ZFN	C.CAPACITOR CH 50V 0.01U	1	
C3033		ECUM1H681JCN	C.CAPACITOR 50V 680P	1	
C3034		ECUM1H104ZFN	C.CAPACITOR CH 50V 0.1U	1	
C3035		ECUM1H181JCN	C.CAPACITOR CH 50V 180P	1	
C3036		ECUM1H220JCN	C.CAPACITOR CH 50V 22P	1	
C3038		ECEA1AFS221	E.CAPACITOR 10V 220U	1	
C3905,06		ECUM1H821JCN	C.CAPACITOR CH 50V 820P	2	
C3911		ECEA1CKA100	E.CAPACITOR 16V 10U	1	
C3914,15		ECUM1C105ZFN	C.CAPACITOR CH 16V 1U	2	
C4001		ECUM1H103ZFN	C.CAPACITOR CH 50V 0.01U	1	
C4002		ECKD2H331KB	C.CAPACITOR 500V 330P	1	
C4003		ECQP1332JZ	P.CAPACITOR 50V 3300P	1	
C4004		ECQB1H102JZ	P.CAPACITOR 50V 1000P	1	
C4005		ECQD1H153JZ	P.CAPACITOR 50V 0.015U	1	
C4006		ECEA16M33	E.CAPACITOR 16V 33U	1	
C4007		ECUM1H221JCN	C.CAPACITOR CH 50V 220P	1	
C4008		ECUM1H681JCN	C.CAPACITOR 50V 680P	1	
C4010		ECUM1H683ZFN	C.CAPACITOR CH 50V 0.068U	1	
C4034		ECEA1HKA010	E.CAPACITOR 50V 1U	1	
C4503		ECUX1H152KBV	C.CAPACITOR CH 50V 1500P	1	
C4504,05		ECEA1CU470	E.CAPACITOR 16V 47U	2	
C4506		ECEA1CU100	E.CAPACITOR 16V 10U	1	
C4507		ECQB1H223JA	P.CAPACITOR 50V 0.022U	1	
C4508		ECEA1EKN4R7	E.CAPACITOR 25V 4.7U	1	
C4509		ECEA1AU470	E.CAPACITOR 10V 47U	1	
C4510		ECQB1H103JA	P.CAPACITOR 50V 0.01U	1	
C4511		ECQB1H332JA	P.CAPACITOR 50V 3300P	1	
C4512		ECUX1H561JV	C.CAPACITOR CH 50V 560P	1	
C4513		ECUX1H681JV	C.CAPACITOR CH 50V 680P	1	
C4514		ECUX1H561JV	C.CAPACITOR CH 50V 560P	1	
C4515		ECEA1EU4R7	E.CAPACITOR 25V 4.7U	1	
C4517		ECEA1AU101	E.CAPACITOR 10V 100U	1	
C4518		ECUX1C104ZFV	C.CAPACITOR CH 16V 0.1U	1	
C4521		ECUM1E473KBN	C.CAPACITOR CH 25V 0.047U	1	
C4522		ECEA1HU3R3	E.CAPACITOR 50V 3.3U	1	
C4524		ECEA1AU101	E.CAPACITOR 10V 100U	1	
C4528		ECUX1C104ZFV	C.CAPACITOR CH 16V 0.1U	1	
C4530		ECEA0JU470	E.CAPACITOR 6.3V 47U	1	
C4533		ECEA1AU330	E.CAPACITOR 10V 33U	1	
C4537		ECUX1H102JCV	C.CAPACITOR CH 50V 1000P	1	
C4538		ECEA1HUR47	E.CAPACITOR 50V 0.47U	1	
C4539		ECUM1C224ZFV	C.CAPACITOR CH 16V 0.22U	1	
C4541		ECUX1C104ZFV	C.CAPACITOR CH 16V 0.1U	1	

Ref.No.		Part No.	Part Name & Description	Pcs	Remarks
C4545		ECUX1H102JCV	C.CAPACITOR CH 50V 1000P	1	
C4551		ECQB1H223JA	P.CAPACITOR 50V 0.022U	1	
C4556		ECEA1CU100	E.CAPACITOR 16V 10U	1	
C4558		ECEA1EKN4R7	E.CAPACITOR 25V 4.7U	1	
C4559		ECEA1AU470	E.CAPACITOR 10V 47U	1	
C4560		ECQB1H103JA	P.CAPACITOR 50V 0.01U	1	
C4561		ECQB1H332JA	P.CAPACITOR 50V 3300P	1	
C4562		ECUX1H561JV	C.CAPACITOR CH 50V 560P	1	
C4563		ECUX1H681JV	C.CAPACITOR CH 50V 680P	1	
C4564		ECUX1H561JV	C.CAPACITOR CH 50V 560P	1	
C4565		ECEA1EU4R7	E.CAPACITOR 25V 4.7U	1	
C4567		ECEA1AU101	E.CAPACITOR 10V 100U	1	
C4568		ECUX1C104ZFV	C.CAPACITOR CH 16V 0.1U	1	
C4572		ECEA1HU3R3	E.CAPACITOR 50V 3.3U	1	
C4576		ECUM1E473KBN	C.CAPACITOR CH 25V 0.047U	1	
C4583		ECEA1AU330	E.CAPACITOR 10V 33U	1	
C4585,86		ECEA1AU101	E.CAPACITOR 10V 100U	2	
C4591		ECUX1C104ZFV	C.CAPACITOR CH 16V 0.1U	1	
C4592		ECUX1H152KBV	C.CAPACITOR CH 50V 1500P	1	
C4593		ECUX1H221JCV	C.CAPACITOR CH 50V 220P	1	
C4594,95		ECUX1H101JCV	C.CAPACITOR CH 50V 100P	2	
C4596		ECEA1CU100	E.CAPACITOR 16V 10U	1	
C4597		ECUX1H330JCV	C.CAPACITOR CH 50V 33P	1	
C4604		ECUM1H182JN	C.CAPACITOR CH 50V 1800P	1	
C4605		ECEA0JKA470	E.CAPACITOR 6.3V 47U	1	
C4611		ECQB1H562JZ	P.CAPACITOR 50V 5600P	1	
C4616		ECUX1H102JCV	C.CAPACITOR CH 50V 1000P	1	
C4617		ECEA10M22	E.CAPACITOR 10V 22U	1	
C4618		ECQB1H822JZ	P.CAPACITOR 50V 8200P	1	
C4621		ECEA0JKA101	E.CAPACITOR 6.3V 100U	1	
C4629		ECQB1H123JZ	E.CAPACITOR 50V 0.012U	1	
C4636		ECUX1H151JCV	C.CAPACITOR CH 50V 150P	1	
C4638		ECQB1H272JZ	P.CAPACITOR 50V 2700P	1	
C4652,53		ECUM1C105ZFN	C.CAPACITOR CH 16V 1U	2	
C6001		ECUM1H104ZFN	C.CAPACITOR CH 50V 0.1U	1	
C6002		ECUM1H103ZFN	C.CAPACITOR CH 50V 0.01U	1	
C6003		ECEA1HKA2R2	E.CAPACITOR 50V 2.2U	1	
C6004		ECUM1H221JCN	C.CAPACITOR CH 50V 220P	1	
C6005		ECUM1H223KBN	C.CAPACITOR CH 50V 0.022U	1	
C6006		ECUM1H472KBN	C.CAPACITOR CH 50V 4700P	1	
C6007,08		ECUM1H220JCN	C.CAPACITOR CH 50V 22P	2	
C6009		ECEA0JKA220	E.CAPACITOR 6.3V 22U	1	
C6010		ECQV1H104JM	P.CAPACITOR 50V 0.1U	1	
C6011		ECUM1H392KBN	C.CAPACITOR CH 50V 3900P	1	
C6012		ECUM1H103ZFN	C.CAPACITOR CH 50V 0.01U	1	
C6013		ECUM1H104ZFN	C.CAPACITOR CH 50V 0.1U	1	
C6014		ECEA0JKA220	E.CAPACITOR 6.3V 22U	1	
C6015,16		ECUM1H271JCN	C.CAPACITOR CH 50V 270P	2	
C6017		ECUM1H103ZFN	C.CAPACITOR CH 50V 0.01U	1	
C6018		ECUM1H102KBN	C.CAPACITOR CH 50V 1000P	1	
C6019		ECEA1CKM100	E.CAPACITOR 16V 10U	1	
C6025-28		ECUM1H103ZFN	C.CAPACITOR CH 50V 0.01U	4	
C7005		ECUM1C105ZFN	C.CAPACITOR CH 16V 1U	1	
C7006		ECEA1AKN100	E.CAPACITOR 10V 10U	1	
C7007		ECUM1H103ZFN	C.CAPACITOR CH 50V 0.01U	1	
C7010		ECEA1CKA100	E.CAPACITOR 16V 10U	1	
C7011		ECUM1H103ZFN	C.CAPACITOR CH 50V 0.01U	1	
C7012		ECUM1H104ZFN	C.CAPACITOR CH 50V 0.1U	1	
C7302		ECEA1CKN100	E.CAPACITOR 16V 10U	1	
C7303		ECQV1H393JZ	P.CAPACITOR 50V 0.039U	1	
C7304		ECEA1CKN100	E.CAPACITOR 16V 10U	1	
C7305		ECQV1H473JZ	P.CAPACITOR 50V 0.047U	1	
C7306		ECQB1H102KZ	P.CAPACITOR 50V 1000P	1	
C7307		ECQB1H822KZ	P.CAPACITOR 50V 8200P	1	
C7308		ECQB1H102KZ	P.CAPACITOR 50V 1000P	1	
C7309		ECQB1H152KZ	F.CAPACITOR 50V 1500P	1	
C7310		ECEA1CK100	E.CAPACITOR 16V 10U	1	
C7311		ECEA1HKR47	E.CAPACITOR 50V 0.47U	1	
C7312		ECQV1H224JM	P.CAPACITOR 50V 0.22U	1	
C7313		ECQV1H104JM	P.CAPACITOR 50V 0.1U	1	
C7314		ECQV1H224JM	P.CAPACITOR 50V 0.22U	1	
C7315		ECQV1H104JM	P.CAPACITOR 50V 0.1U	1	
C7316		ECQV1H224JM	P.CAPACITOR 50V 0.22U	1	
C7317		ECEA1CK101	E.CAPACITOR 16V 100U	1	
C7318		ECUX1H103ZFV	C.CAPACITOR CH 50V 0.01U	1	

Ref.No.		Part No.	Part Name & Description	Pcs	Remarks
C7319		ECEA1CK470	E.CAPACITOR 16V 47U	1	
C7320,21		ECEA1CK100	E.CAPACITOR 16V 10U	2	
C7323,24		ECQV1H393JZ	P.CAPACITOR 50V 0.039U	2	
C7331		ECQV1H474JM	P.CAPACITOR 50V 0.47U	1	
C7332,33		ECUX1H102KBV	C.CAPACITOR CH 50V 1000P	2	
C7334		ECUX1H103ZFV	C.CAPACITOR CH 50V 0.01U	1	
C7335		ECEA1CK470	E.CAPACITOR 16V 47U	1	
C7336		ECUX1H103ZFV	C.CAPACITOR CH 50V 0.01U	1	
C7337		ECUX1H680JCV	C.CAPACITOR CH 50V 68P	1	
C7339		ECUX1H103ZFV	C.CAPACITOR CH 50V 0.01U	1	
C7340		ECUM1H390JPN	C.CAPACITOR CH 50V 39P	1	
C7341		ECUX1H070DCV	C.CAPACITOR CH 50V 7P	1	
C7343		ECEA1CK100	E.CAPACITOR 16V 10U	1	
C7345		ECUX1H103ZFV	C.CAPACITOR CH 50V 0.01U	1	
C7346		ECUM1H390JPN	C.CAPACITOR CH 50V 39P	1	
C7347		ECUX1H070DCV	C.CAPACITOR CH 50V 7P	1	
C7348		ECQV1H393JZ	P.CAPACITOR 50V 0.039U	1	
C7349,50		ECUX1H221JCV	C.CAPACITOR CH 50V 220P	2	
C7351,52		ECUX1H103ZFV	C.CAPACITOR CH 50V 0.01U	2	
C7353		ECEA1CK470	E.CAPACITOR 16V 47U	1	
C7354		ECEA1CK220	E.CAPACITOR 16V 22U	1	
C7355		ECEA1CK100	E.CAPACITOR 16V 10U	1	
C7356		ECEA1CKN100	E.CAPACITOR 16V 10U	1	
C7357		ECEA1CK100	E.CAPACITOR 16V 10U	1	
C7661		ECUM1H104KBM	C.CAPACITOR CH 50V 0.1U	1	
C7662		ECUM1H683KBM	C.CAPACITOR CH 50V 0.068U	1	
C7663		ECUM1H823KBM	C.CAPACITOR CH 50V 0.082U	1	
C7664		ECUM1H273KBM	C.CAPACITOR CH 50V 0.027U	1	
C7665,66		ECUX1H103ZFV	C.CAPACITOR CH 50V 0.01U	2	
C7667		ECEA1HKA100	E.CAPACITOR 50V 10U	1	
C7670,71		ECUX1H103ZFV	C.CAPACITOR CH 50V 0.01U	2	
C7673		ECUX1H103ZFV	C.CAPACITOR CH 50V 0.01U	1	
C7675		ECEA1HKN010	E.CAPACITOR 50V 1U	1	
C7676,77		ECUX1H103ZFV	C.CAPACITOR CH 50V 0.01U	2	
C7679		ECEA1HKN010	E.CAPACITOR 50V 1U	1	
C7681		ECEA1CK220	E.CAPACITOR 16V 22U	1	
C8001		ECUM1C474ZFN	C.CAPACITOR 16V 0.47U	1	
C8002-04		ECUM1H103ZFN	C.CAPACITOR CH 50V 0.01U	3	
C8006		ECUM1H103ZFN	C.CAPACITOR CH 50V 0.01U	1	
C8007		ECEA1AKS330	E.CAPACITOR 10V 33U	1	
C8008		ECUM1H220JCN	C.CAPACITOR CH 50V 22P	1	
C8009		ECUM1H103ZFN	C.CAPACITOR CH 50V 0.01U	1	
C8010-12		ECEA1AKS330	E.CAPACITOR 10V 33U	3	
C8013		ECUM1H103ZFN	C.CAPACITOR CH 50V 0.01U	1	
C8014		ECUM1H561KBN	C.CAPACITOR CH 50V 560P	1	
C8015		ECUM1H221JCN	C.CAPACITOR CH 50V 220P	1	
C8019		ECUM1H680JCN	C.CAPACITOR CH 50V 68P	1	
C8020		ECUM1H470JCN	C.CAPACITOR CH 50V 47P	1	
D302		1SS283	DIODE	1	
D303		MA151A	DIODE	1	
D304		1SS254	DIODE	1	
D701-07		MA77	DIODE	7	
D708		MA3100L	DIODE	1	
D709		MA77	DIODE	1	
D771		MA141WK	DIODE	1	
D772,73		MA141K	DIODE	2	
D801,02		1SS254	DIODE	2	
D804		1SS254	DIODE	1	
D2001		1SS254	DIODE	1	
D2002		MA153	DIODE	1	
D2003,04		1SS254	DIODE	2	
D2007,08		1SS254	DIODE	2	
D2009		MA151WK	DIODE	1	
D2010		MA151K	DIODE	1	
D3001		MA151K	DIODE	1	
D3002,03		1SS254	DIODE	2	
D4001		MA151K	DIODE	1	
D4003		MA151WK	DIODE	1	
D4004		MA723VT	DIODE	1	
D4005		MA151K	DIODE	1	
D4501-04		MA141K	DIODE	4	
D6001		1SS254	DIODE	1	
D6002		MA151K	DIODE	1	

Ref.No.		Part No.	Part Name & Description	Pcs	Remarks
D6003		1SS254	DIODE	1	
D6005,06		1SS254	DIODE	2	
D6007		MA4075-L	DIODE	1	
D7002		MA723VT	DIODE	1	
D7003		1SS254	DIODE	1	
D7004-06		11ES1	DIODE	3	
D7007		1SS254	DIODE	1	
D7304		MA3100L	DIODE	1	
D7601		MA141K	DIODE	1	
D7602		MA3082M	DIODE	1	
DL801		VLD0198	DELAY LINE	1	
FE		VJS1141	CONNECTOR (FEMALE)	1	
FL8001		ELB4N055	FILTER	1	
FL8002		ELB4L149	FILTER	1	
IC301		VEPH29D	IC	1	
IC701		LA7577	IC	1	
IC702		LA7975	IC	1	
IC801		NJM2233BMA	IC	1	
IC802		M52352FP	IC	1	
IC2001		XRA6887-V3	IC	1	
IC2002		BA6871	IC	1	
IC2004		LM358PS	IC	1	
IC3001		NJM2233BL	IC	1	
IC3002		BA7004	IC	1	
IC4501		XLH7773KS	IC	1	
IC4601		BA7755AF	IC	1	
IC6001		MN67434VRSR	IC	1	
IC7301		TDA3803A	IC	1	
IC7302		TA8721SN	IC	1	
IC7303		TC4W66F	IC	1	
IC7652		AN5043SC	IC	1	
IC8001		BA7049FS	IC	1	
J3901,02		VJJ0348	JACK	2	
L303		ELESQ220KA	COIL 22UH	1	
L304		ELESQ101KA	COIL 100UH	1	
L305		ELESQ121JA	COIL	1	
L306		ELESQ390KA	COIL 39UH	1	
L701		ELESQ680KA	COIL 68UH	1	
L711		ELJNAR39KF	COIL	1	
L712-16		ELJFA151KB	COIL 150UH	5	
L718		ELJNA1R0JF	COIL H	1	
L719		ELESQ5R6KA	COIL 5.6UH	1	
L721		ELJFA151KB	COIL 150UH	1	
L723		ELJFA151KB	COIL 150UH	1	
L724		ELJNAR27KF	COIL	1	
L751		ELJFA100KB	COIL	1	
L752		ELESQ270KA	COIL 27UH	1	
L770		ELESQ680KA	COIL 68UH	1	
L803		ELESQ5R6KA	COIL 5.6UH	1	
L804		ELESQ101KA	COIL 100UH	1	
L805		ELESQ270KA	COIL 27UH	1	
L807,08		VLQ0540J150	COIL 15UH	2	
L809		ELESQ101KA	COIL 100UH	1	
L811,12		ELESQ101KA	COIL 100UH	2	
L2001		VLP0074	COIL	1	
L2002		ELESE102KA	COIL 1000UH	1	
L2003,04		VLQ0599J680	COIL	2	
L2005		VLP0083	COIL	1	
L2006		VLQ0599J680	COIL	1	
L3001		VLQ0599J680	COIL	1	
L3002		VLQ0599J151	COIL 150UH	1	
L3003		VLQ0599J820	COIL H	1	
L3005		VLQ0599J680	COIL	1	

Ref.No.		Part No.	Part Name & Description	Pcs	Remarks
L3006		VLQ0599J101	COIL 100UH	1	
L3007,08		VLQ0599J680	COIL	2	
L3009		VLQ0599J120	COIL H	1	
L3010		VLQ0599J6R8	COIL H	1	
L3011		VLQ0599J680	COIL	1	
L3012		VLQ0599J270	COIL 27UH	1	
L3013		VLQ0599J680	COIL	1	
L4001,02		ERJ6GMZOR00	M.RESISTOR 1/10W 0	2	
L4501,02		ELESE101KA	COIL 100UH	2	
L4601		VLQEL07F153J	COIL 15MH	1	
L6001		VLP0074	COIL	1	
L6005		VLQ0599J331	COIL H	1	
L7003		VLQ0599J1R0	COIL 1UH	1	
L7004		VLQ0599J680	COIL	1	
L7005		VLQ0599J1R0	COIL 1UH	1	
L7006		VLQ0599J680	COIL	1	
L7301		ELESQ102KA	COIL 1000UH	1	
L8002		ELESQ101KA	COIL 100UH	1	
L8003		ELESQ221KA	COIL 220UH	1	
L8004		VLQ0188J470	COIL 47UH	1	
P1001		VJS3537A010G	CONNECTOR (FEMALE) 10P	1	
P2001		VJP1232T	CONNECTOR (MALE) 5P	1	
P2001		VJS1738T	CONNECTOR (FEMALE)	1	
P2002		VJS3537A015G	CONNECTOR (FEMALE) 15P	1	
P2003		VJP3502	CONNECTOR (MALE)	1	
P2503		VJS3482	CONNECTOR (FEMALE)	1	
P2902		VJS1738T	CONNECTOR (FEMALE)	1	
P3001		VJS3537A020G	CONNECTOR (FEMALE) 20P	1	
P4001		VJS2331	CONNECTOR (FEMALE)	1	
P4002		VJP1230T	CONNECTOR (MALE) 3P	1	
P4002		VJS1230T	CONNECTOR (FEMALE)	1	
P6001		VJS3537A025G	CONNECTOR (FEMALE) 25P	1	
P6002		VJS3537A012G	CONNECTOR (FEMALE) 12P	1	
P6003		VJP1242T	CONNECTOR (MALE) 2P	1	
P6004		VJS3537A013G	CONNECTOR (FEMALE) 13P	1	
PK4001-03		VJR0757B018T	CONNECTOR	3	
PP801		VJP3043A005W	CONNECTOR (MALE) 5P	1	
PP802		VJP3043A003W	CONNECTOR (MALE) 3P	1	
PP803		VJP3043A007W	CONNECTOR (MALE) 7P	1	
PP3001		VJP3044G009W	CONNECTOR (MALE) 9P	1	
PP3002		VJP3044G012W	CONNECTOR (MALE) 12P	1	
PP3003		VJP3044G006W	CONNECTOR (MALE) 6P	1	
PP7001		VJP3043A007W	CONNECTOR (MALE) 7P	1	
PP7002-04		VJP3043A005W	CONNECTOR (MALE) 5P	3	
PP7005		VJP3043A006W	CONNECTOR (MALE) 6P	1	
PS301		VJS3044F009W	CONNECTOR (FEMALE) 9P	1	
PS302		VJS3044F012W	CONNECTOR (FEMALE) 12P	1	
PS303		VJS3044F006W	CONNECTOR (FEMALE) 6P	1	
PS701-03		VJS3043B005W	CONNECTOR (FEMALE) 5P	3	
PS704		VJS3043B007W	CONNECTOR (FEMALE) 7P	1	
PS801		VJS3043B005W	CONNECTOR (FEMALE) 5P	1	
PS802		VJS3043B003W	CONNECTOR (FEMALE) 3P	1	
PS803		VJS3043B007W	CONNECTOR (FEMALE) 7P	1	
PS7301,02		VJR0477	PACK PIN	2	
Q703		MSD601-S	TRANSISTOR	1	
Q712		2SD1996-R	TRANSISTOR	1	
Q713		2SD1979-S	TRANSISTOR	1	
Q714		2SB1218-R	TRANSISTOR	1	
Q715		2SD1820	TRANSISTOR	1	
Q716		2SC3931-C	TRANSISTOR	1	
Q717		2SC2377	TRANSISTOR	1	
Q771		MSD601-S	TRANSISTOR	1	
Q1001		MSD1328	TRANSISTOR	1	
Q3001,02		MSD601-R	TRANSISTOR	2	
Q3003		MSB709-R	TRANSISTOR	1	

Ref.No.		Part No.	Part Name & Description	Pcs	Remarks
Q3004,05		MSD601-R	TRANSISTOR	2	
Q3006		MSC2295	TRANSISTOR	1	
Q3007		MSB709-R	TRANSISTOR	1	
Q3008		MSC2295	TRANSISTOR	1	
Q3010		2SB709	TRANSISTOR	1	
Q4002		2SD602A-R	TRANSISTOR	1	
Q4003		MSD601	TRANSISTOR	1	
Q4501		2SD655	TRANSISTOR	1	
Q4551		2SB561	TRANSISTOR	1	
Q4552		2SD1819A	TRANSISTOR	1	
Q4601		2SD1819A	TRANSISTOR	1	
Q6001		2SD1991A	TRANSISTOR	1	
Q6002		MSB709-R	TRANSISTOR	1	
Q6004,05		2SB1321-R	TRANSISTOR	2	
Q7301		2SD1820-S	TRANSISTOR	1	
Q7304		2SD1820	TRANSISTOR	1	
Q7305		MSD601	TRANSISTOR	1	
Q7306		2SC2404-C	TRANSISTOR	1	
QR303		MRN2404	TRANSISTOR-RESISTOR	1	
QR306		MRN1404	TRANSISTOR-RESISTOR	1	
QR701-03		UN5213	TRANSISTOR-RESISTOR	3	
QR704,05		XN4212	TRANSISTOR-TRANSISTOR	2	
QR706		DTC363EK	TRANSISTOR-RESISTOR	1	
QR707-09		XN4213	TRANSISTOR-RESISTOR	3	
QR711,12		UN5213	TRANSISTOR-RESISTOR	2	
QR715		UN5213	TRANSISTOR-RESISTOR	1	
QR717		UN5213	TRANSISTOR-RESISTOR	1	
QR804		MRN2404	TRANSISTOR-RESISTOR	1	
QR805,06		MRN1404	TRANSISTOR-RESISTOR	2	
QR2001		UN2113T	TRANSISTOR-RESISTOR	1	
QR2002		UN2114	TRANSISTOR-RESISTOR	1	
QR2003		XN1213	TRANSISTOR-TRANSISTOR	1	
QR2004		UN2112T	TRANSISTOR-RESISTOR	1	
QR3001		UN2111T	TRANSISTOR-RESISTOR	1	
QR3002,03		DTC363EK	TRANSISTOR-RESISTOR	2	
QR3005		UN2212T	TRANSISTOR-RESISTOR	1	
QR4001,02		UN2213T	TRANSISTOR-RESISTOR	2	
QR4508,09		UN5113	TRANSISTOR-RESISTOR	2	
QR4510		UN5212	TRANSISTOR-RESISTOR	1	
QR4602		UN5111	TRANSISTOR-RESISTOR	1	
QR4603		UN5213	TRANSISTOR-RESISTOR	1	
QR6001		XN1211	TRANSISTOR-RESISTOR	1	
QR6003		UN2211T	TRANSISTOR-RESISTOR	1	
QR6004		UN2212T	TRANSISTOR-RESISTOR	1	
QR7301,02		UN5213	TRANSISTOR-RESISTOR	2	
QR7312-14		UN5211	TRANSISTOR-RESISTOR	3	
QR7315,16		UN5213	TRANSISTOR-RESISTOR	2	
QR7317		XN4213	TRANSISTOR-RESISTOR	1	
QR7601		UN5213	TRANSISTOR-RESISTOR	1	
R304		ERJ6GMZOR00	M.RESISTOR 1/10W 0	1	
R307		ERJ6GEYJ472	M.RESISTOR CH 1/10W 4.7K	1	
R308		ERJ6GMYJ472	M.RESISTOR CH 1/10W 4.7K	1	
R310		ERJ6GMYJ272	M.RESISTOR CH 1/10W 2.7K	1	
R312		ERJ6GMYJ473	M.RESISTOR CH 1/10W 47K	1	
R315		ERJ6GMYJ393	M.RESISTOR CH 1/10W 39K	1	
R316		ERJ6GMYJ392	M.RESISTOR CH 1/10W 3.9K	1	
R318,19		ERJ6GMYJ103	M.RESISTOR CH 1/10W 10K	2	
R322		ERJ6GMYJ332	M.RESISTOR CH 1/10W 3.3K	1	
R327		ERJ6GEYK125	M.RESISTOR CH 1/10W 1.2M	1	
R701		ERJ3GEYJ682	M.RESISTOR CH 1/16W 6.8K	1	
R702		ERJ3GEYJ222	M.RESISTOR CH 1/16W 2.2K	1	
R703		ERJ3GEYJ183	M.RESISTOR CH 1/16W 18K	1	
R704		ERJ3GEYJ152	M.RESISTOR CH 1/16W 1.5K	1	
R705		ERJ3GEYJ222	M.RESISTOR CH 1/16W 2.2K	1	
R706		ERJ3GEYJ103	M.RESISTOR CH 1/16W 10K	1	
R707		ERJ3GEYJ272	M.RESISTOR CH 1/16W 2.7K	1	
R709		ERJ3GEYJ183	M.RESISTOR CH 1/16W 18K	1	
R710		ERJ3GEYJ122	M.RESISTOR CH 1/16W 1.2K	1	
R712		ERJ3GEYJ105	M.RESISTOR CH 1/16W 1M	1	
R713		ERJ3GEYJ184	M.RESISTOR CH 1/16W 180K	1	
R714		ERJ3GEYJ154	M.RESISTOR CH 1/16W 150K	1	

Ref.No.		Part No.	Part Name & Description	Pcs	Remarks
R715		ERJ3GEYJ101	M.RESISTOR CH 1/16W 100	1	
R716		ERJ6GEYJ102	M.RESISTOR CH 1/10W 1K	1	
R717		ERJ3GEYJ121	M.RESISTOR CH 1/16W 120	1	
R718		ERJ3GEYJ470	M.RESISTOR CH 1/16W 47	1	
R720		ERJ3GEYJ102	M.RESISTOR CH 1/16W 1K	1	
R721-23		ERJ3GEYJ103	M.RESISTOR CH 1/16W 10K	3	
R724		VRE0040E471	M.RESISTOR CH 1/10W 470	1	
R725		ERJ3GEYJ271	M.RESISTOR CH 1/16W 270	1	
R726		ERJ6GEYJ102	M.RESISTOR CH 1/10W 1K	1	
R727		ERJ3GEYJ101	M.RESISTOR CH 1/16W 100	1	
R728		ERJ3GEYJ152	M.RESISTOR CH 1/16W 1.5K	1	
R729-32		ERJ3GEYJ223	M.RESISTOR CH 1/16W 22K	4	
R733		ERJ3GEYJ103	M.RESISTOR CH 1/16W 10K	1	
R734		ERJ3GEYJ562	M.RESISTOR CH 1/16W 5.6K	1	
R735		ERJ3GEYJ223	M.RESISTOR CH 1/16W 22K	1	
R736		ERJ3GEYJ103	M.RESISTOR CH 1/16W 10K	1	
R737		ERJ3GEYJ223	M.RESISTOR CH 1/16W 22K	1	
R738		ERJ3GEYJ103	M.RESISTOR CH 1/16W 10K	1	
R748		VRE0040E151	M.RESISTOR CH 1/10W 150	1	
R751,52		ERJ3GEYJ103	M.RESISTOR CH 1/16W 10K	2	
R753		ERJ3GEYJ223	M.RESISTOR CH 1/16W 22K	1	
R756		ERJ3GEYJ103	M.RESISTOR CH 1/16W 10K	1	
R758		ERJ3GEYJ102	M.RESISTOR CH 1/16W 1K	1	
R759		ERJ3GEYJ222	M.RESISTOR CH 1/16W 2.2K	1	
R760		ERJ3GEYJ562	M.RESISTOR CH 1/16W 5.6K	1	
R761		ERJ3GEYJ472	M.RESISTOR CH 1/16W 4.7K	1	
R763,64		ERJ3GEYJ272	M.RESISTOR CH 1/16W 2.7K	2	
R765		ERJ3GEYJ682	M.RESISTOR CH 1/16W 6.8K	1	
R766		ERJ3GEYJ152	M.RESISTOR CH 1/16W 1.5K	1	
R767		ERJ3GEYJ332	M.RESISTOR CH 1/16W 3.3K	1	
R768		ERJ3GEYJ122	M.RESISTOR CH 1/16W 1.2K	1	
R769		ERJ3GEYJ681	M.RESISTOR CH 1/16W 680	1	
R770,71		ERJ3GEYJ223	M.RESISTOR CH 1/16W 22K	2	
R772		ERJ3GEYJ103	M.RESISTOR CH 1/16W 10K	1	
R773		ERJ3GEYJ472	M.RESISTOR CH 1/16W 4.7K	1	
R774		ERJ3GEYJ562	M.RESISTOR CH 1/16W 5.6K	1	
R775		ERJ3GEYJ101	M.RESISTOR CH 1/16W 100	1	
R776		ERJ3GEYJ472	M.RESISTOR CH 1/16W 4.7K	1	
R777		ERJ6GEYJ821	M.RESISTOR CH 1/10W 820	1	
R778		ERJ6GEYJ122	M.RESISTOR CH 1/10W 1.2K	1	
R779		ERJ3GEYJ181	M.RESISTOR CH 1/16W 180	1	
R792		ERJ3GEYJ120	M.RESISTOR CH 1/16W 12	1	
R793		ERJ3GEYJ102	M.RESISTOR CH 1/16W 1K	1	
R794		ERJ6GEYJ392	M.RESISTOR CH 1/10W 3.9K	1	
R813		ERJ6GMYJ102	M.RESISTOR CH 1/10W 1K	1	
R814		ERJ6GMYJ393	M.RESISTOR CH 1/10W 39K	1	
R815		ERJ6GMYJ821	M.RESISTOR CH 1/10W 820	1	
R816		ERJ6GMYJ471	M.RESISTOR CH 1/10W 470	1	
R817		ERJ6GMYJ182	M.RESISTOR CH 1/10W 1.8K	1	
R818		ERJ6GMYJ681	M.RESISTOR CH 1/10W 680	1	
R819		ERJ6GMYJ272	M.RESISTOR CH 1/10W 2.7K	1	
R820,21		ERJ6GMYJ122	M.RESISTOR CH 1/10W 1.2K	2	
R822		ERJ6GMYJ103	M.RESISTOR CH 1/10W 10K	1	
R823,24		ERJ6GMYJ152	M.RESISTOR CH 1/10W 1.5K	2	
R827		ERJ6GMYJ122	M.RESISTOR CH 1/10W 1.2K	1	
R828		ERJ6GMYJ271	M.RESISTOR CH 1/10W 270	1	
R829		ERJ6GMYJ122	M.RESISTOR CH 1/10W 1.2K	1	
R830		ERJ6GMYJ271	M.RESISTOR CH 1/10W 270	1	
R831		ERJ6GMYJ681	M.RESISTOR CH 1/10W 680	1	
R832		ERJ6GMYJ154	M.RESISTOR CH 1/10W 150K	1	
R833		ERJ6GMYJ204	M.RESISTOR CH 1/10W 200K	1	
R834		ERJ6GMYJ153	M.RESISTOR CH 1/10W 15K	1	
R835		ERJ6GMYJ103	M.RESISTOR CH 1/10W 10K	1	
R836		ERJ6GMYJ154	M.RESISTOR CH 1/10W 150K	1	
R848		ERJ6GMYJ222	M.RESISTOR CH 1/10W 2.2K	1	
R849		ERJ6GMYJ473	M.RESISTOR CH 1/10W 47K	1	
R850		ERJ6GMYJ563	M.RESISTOR CH 1/10W 56K	1	
R853		ERJ6GMYJ473	M.RESISTOR CH 1/10W 47K	1	
R855		ERJ6GMYJ152	M.RESISTOR CH 1/10W 1.5K	1	
R857		ERJ6GMYJ101	M.RESISTOR CH 1/10W 100	1	
R858		ERJ6GMYJ561	M.RESISTOR CH 1/10W 560	1	
R859		ERJ6GMYJ102	M.RESISTOR CH 1/10W 1K	1	
R1001		ERJ6GMYJ102	M.RESISTOR CH 1/10W 1K	1	
R2001		ERJ6GMYG512	M.RESISTOR CH 1/10W 5.1K	1	
R2002		ERJ6GMYG913	M.RESISTOR CH 1/10W 91K	1	

Ref.No.		Part No.	Part Name & Description	Pcs	Remarks
R2003		ERX1SJ1R8	M.RESISTOR 1W 1.8	1	
R2004-06		ERJ6GMYJ102	M.RESISTOR CH 1/10W 1K	3	
R2007,08		ERJ6GMYJ392	M.RESISTOR CH 1/10W 3.9K	2	
R2009		ERX12SJR47	M.RESISTOR 1/12W 0.47U	1	
R2010		ERDS2TJ560	C.RESISTOR 1/4W 56	1	
R2011,12		ERJ6GMYJ105	M.RESISTOR CH 1/10W 1M	2	
R2013		ERDS2TJ681	C.RESISTOR 1/4W 680	1	
R2014		ERJ6GMYG821	M.RESISTOR CH 1/10W 820	1	
R2015,16		ERDS2TJ560	C.RESISTOR 1/4W 56	2	
R2017		ERDS1TJ561	C.RESISTOR 1/2W 560	1	
R2018		ERJ6GMYJ222	M.RESISTOR CH 1/10W 2.2K	1	
R2019		ERJ6GMYG432	M.RESISTOR CH 1/10W 4.3K	1	
R2020		ERJ6GMYG473	M.RESISTOR CH 1/10W 47K	1	
R2021		ERJ6GMYJ104	M.RESISTOR CH 1/10W 100K	1	
R2022		ERJ6GMYJ683	M.RESISTOR CH 1/10W 68K	1	
R2023		ERJ6GMYJ333	M.RESISTOR CH 1/10W 33K	1	
R2024		ERJ6GMYJ563	M.RESISTOR CH 1/10W 56K	1	
R2025		ERJ6GMYJ682	M.RESISTOR CH 1/10W 6.8K	1	
R2026		ERJ6GMYJ684	M.RESISTOR CH 1/10W 680K	1	
R2027,28		ERJ6GMYJ223	M.RESISTOR CH 1/10W 22K	2	
R2029		ERJ6GMYJ272	M.RESISTOR CH 1/10W 2.7K	1	
R2031		ERJ6GMYJ244	M.RESISTOR CH 1/10W 220K	1	
R2032		ERJ6GMYG103	M.RESISTOR CH 1/10W 10K	1	
R2033		ERJ6GMYG133	M.RESISTOR CH 1/10W 13K	1	
R2034		ERJ6GMYJ102	M.RESISTOR CH 1/10W 1K	1	
R2035		ERJ6GMYJ105	M.RESISTOR CH 1/10W 1M	1	
R2036,37		ERJ6GMYJ472	M.RESISTOR CH 1/10W 4.7K	2	
R2038		ERJ6GMYJ683	M.RESISTOR CH 1/10W 68K	1	
R2039		ERJ6GMYJ472	M.RESISTOR CH 1/10W 4.7K	1	
R2040		ERJ6GMYJ332	M.RESISTOR CH 1/10W 3.3K	1	
R2041		ERJ6GMYJ221	M.RESISTOR CH 1/10W 220	1	
R2042,43		ERJ6GMYJ223	M.RESISTOR CH 1/10W 22K	2	
R2044		ERJ6GMYJ102	M.RESISTOR CH 1/10W 1K	1	
R2045		ERJ6GMYJ104	M.RESISTOR CH 1/10W 100K	1	
R2046		ERJ6GMYG273	M.RESISTOR CH 1/10W 27K	1	
R2047		ERJ6GMYJ104	M.RESISTOR CH 1/10W 100K	1	
R2048		ERJ6GMYG124	M.RESISTOR CH 1/10W 120K	1	
R2050		ERJ6GMYJ683	M.RESISTOR CH 1/10W 68K	1	
R2051		ERJ6GMYJ392	M.RESISTOR CH 1/10W 3.9K	1	
R2053,54		ERJ6GMYJ222	M.RESISTOR CH 1/10W 2.2K	2	
R2055		ERJ6GMYJ471	M.RESISTOR CH 1/10W 470	1	
R2056,57		ERJ6GMYJ822	M.RESISTOR CH 1/10W 8.2K	2	
R2060		ERDS2TJ332	C.RESISTOR 1/4W 3.3K	1	
R3001		ERJ6GMYJ102	M.RESISTOR CH 1/10W 1K	1	
R3002		ERJ6GMYJ222	M.RESISTOR CH 1/10W 2.2K	1	
R3003		ERJ6GMYJ103	M.RESISTOR CH 1/10W 10K	1	
R3004		ERJ6GMYJ272	M.RESISTOR CH 1/10W 2.7K	1	
R3005		ERJ6GMYJ332	M.RESISTOR CH 1/10W 3.3K	1	
R3006		ERDS2TJ471	C.RESISTOR 1/4W 470	1	
R3007		ERJ6GMYJ222	M.RESISTOR CH 1/10W 2.2K	1	
R3008		ERJ6GMYJ681	M.RESISTOR CH 1/10W 680	1	
R3009		ERJ6GMYJ222	M.RESISTOR CH 1/10W 2.2K	1	
R3010		ERJ6GMYJ102	M.RESISTOR CH 1/10W 1K	1	
R3011		ERJ6GMYJ561	M.RESISTOR CH 1/10W 560	1	
R3012,13		ERJ6GMYJ473	M.RESISTOR CH 1/10W 47K	2	
R3014		ERJ6GMYJ223	M.RESISTOR CH 1/10W 22K	1	
R3015,16		ERJ6GMYJ561	M.RESISTOR CH 1/10W 560	2	
R3017		ERJ6GMYJ391	M.RESISTOR CH 1/10W 390	1	
R3018		ERJ6GMYJ102	M.RESISTOR CH 1/10W 1K	1	
R3019,20		ERJ6GMYJ821	M.RESISTOR CH 1/10W 820	2	
R3021		ERJ6GMYJ122	M.RESISTOR CH 1/10W 1.2K	1	
R3022		ERJ6GMYJ102	M.RESISTOR CH 1/10W 1K	1	
R3023		ERJ6GMYJ103	M.RESISTOR CH 1/10W 10K	1	
R3024		ERJ6GMYJ332	M.RESISTOR CH 1/10W 3.3K	1	
R3025		ERJ6GMYJ152	M.RESISTOR CH 1/10W 1.5K	1	
R3026,27		ERJ6GMYJ102	M.RESISTOR CH 1/10W 1K	2	
R3028		ERJ6GMYJ471	M.RESISTOR CH 1/10W 470	1	
R3029		ERDS2TJ103	C.RESISTOR 1/4W 10K	1	
R3030		ERJ6GMYJ103	M.RESISTOR CH 1/10W 10K	1	
R3031		ERJ6GMYJ152	M.RESISTOR CH 1/10W 1.5K	1	
R3032		ERJ6GMYJ561	M.RESISTOR CH 1/10W 560	1	
R3033		ERJ6GMYJ223	M.RESISTOR CH 1/10W 22K	1	
R3035,36		ERJ6GMYJ223	M.RESISTOR CH 1/10W 22K	2	
R3037		ERJ6GMYJ222	M.RESISTOR CH 1/10W 2.2K	1	
R3038		ERJ6GMYJ102	M.RESISTOR CH 1/10W 1K	1	

Ref.No.		Part No.	Part Name & Description	Pcs	Remarks
R3906		ERJ6GMYJ750	M.RESISTOR CH 1/10W 75	1	
R3907		ERJ6GMYJ102	M.RESISTOR CH 1/10W 1K	1	
R3909		ERDS2TJ393	C.RESISTOR 1/4W 39K	1	
R3912		ERDS2TJ393	C.RESISTOR 1/4W 39K	1	
R3913		ERJ6GMYJ391	M.RESISTOR CH 1/10W 390	1	
R3914		ERJ6GMYJ102	M.RESISTOR CH 1/10W 1K	1	
R3915		ERJ6GMYJ750	M.RESISTOR CH 1/10W 75	1	
R3917		ERJ6GMZ0R00	M.RESISTOR 1/10W 0	1	
R3919		ERJ6GMYJ391	M.RESISTOR CH 1/10W 390	1	
R3920		ERJ6GMZ0R00	M.RESISTOR 1/10W 0	1	
R4001		ERJ6GMYJ332	M.RESISTOR CH 1/10W 3.3K	1	
R4002		ERJ6GMYJ223	M.RESISTOR CH 1/10W 22K	1	
R4003		ERJ6GMYJ392	M.RESISTOR CH 1/10W 3.9K	1	
R4004		ERJ6GMYJ183	M.RESISTOR CH 1/10W 18K	1	
R4005		ERJ6GMYJ823	M.RESISTOR CH 1/10W 82K	1	
R4006		ERJ6GMYJ273	M.RESISTOR CH 1/10W 27K	1	
R4007		ERJ6GMYJ683	M.RESISTOR CH 1/10W 68K	1	
R4008		ERJ6GMYJ823	M.RESISTOR CH 1/10W 82K	1	
R4009		ERJ6GMYJ100	M.RESISTOR CH 1/10W 10	1	
R4010,11		ERJ6GMYJ823	M.RESISTOR CH 1/10W 82K	2	
R4014		ERJ6GMYJ562	M.RESISTOR CH 1/10W 5.6K	1	
R4018		ERJ6GMYJ333	M.RESISTOR CH 1/10W 33K	1	
R4501,02		ERJ3GEY0R00	M.RESISTOR CH 1/16W 0	2	
R4503		VRE0071E36C	M.RESISTOR CH 1/10W	1	
R4506,07		ERJ3GEYJ473	M.RESISTOR CH 1/16W 47K	2	
R4508		ERJ3GEYG224	M.RESISTOR CH 1/16W 220K	1	
R4509		VRE0071E622	M.RESISTOR CH 1/10W	1	
R4511		ERJ3GEYG273	M.RESISTOR CH 1/16W 27K	1	
R4512		VRE0071E153	M.RESISTOR CH 1/10W	1	
R4513		ERJ3GEYG103	M.RESISTOR CH 1/16W 10K	1	
R4514		ERJ3GEYJ223	M.RESISTOR CH 1/16W 22K	1	
R4518,19		ERJ3GEY0R00	M.RESISTOR CH 1/16W 0	2	
R4522		ERJ3GEYJ225	M.RESISTOR CH 1/16W 2.2M	1	
R4527		VRE0071E333	M.RESISTOR CH 1/10W	1	
R4528		VRE0071E153	M.RESISTOR CH 1/10W	1	
R4529		ERJ3GEYG562	M.RESISTOR CH 1/16W 5.6K	1	
R4530		ERJ3GEYJ334	M.RESISTOR CH 1/16W 330K	1	
R4534		ERJ3GEYJ472	M.RESISTOR CH 1/16W 4.7K	1	
R4535		ERJ3GEYJ104	M.RESISTOR CH 1/16W 100K	1	
R4539		ERJ3GEYJ104	M.RESISTOR CH 1/16W 100K	1	
R4541		ERJ3GEYJ152	M.RESISTOR CH 1/16W 1.5K	1	
R4542		ERJ3GEYJ222	M.RESISTOR CH 1/16W 2.2K	1	
R4543		ERJ3GEYJ472	M.RESISTOR CH 1/16W 4.7K	1	
R4551,52		ERJ3GEYJ393	M.RESISTOR CH 1/16W 39K	2	
R4553,54		ERJ3GEYJ273	M.RESISTOR CH 1/16W 27K	2	
R4558		ERJ3GEYG224	M.RESISTOR CH 1/16W 220K	1	
R4561		ERJ3GEYG273	M.RESISTOR CH 1/16W 27K	1	
R4562		VRE0034E123	M.RESISTOR CH 1/10W 12K	1	
R4563		ERJ3GEYG272	M.RESISTOR CH 1/16W 2.7K	1	
R4568,69		ERJ3GEYJ273	M.RESISTOR CH 1/16W 27K	2	
R4572		ERJ3GEYJ473	M.RESISTOR CH 1/16W 47K	1	
R4573		ERJ3GEYJ152	M.RESISTOR CH 1/16W 1.5K	1	
R4577		ERJ3GEYJ473	M.RESISTOR CH 1/16W 47K	1	
R4578		VRE0071E473	M.RESISTOR CH 1/10W 47K	1	
R4581		ERJ3GEYJ104	M.RESISTOR CH 1/16W 100K	1	
R4583		ERJ3GEYJ102	M.RESISTOR CH 1/16W 1K	1	
R4584		ERJ3GEYJ152	M.RESISTOR CH 1/16W 1.5K	1	
R4585		ERJ3GEY0R00	M.RESISTOR CH 1/16W 0	1	
R4586		ERJ3GEYJ152	M.RESISTOR CH 1/16W 1.5K	1	
R4587,88		ERJ3GEYJ273	M.RESISTOR CH 1/16W 27K	2	
R4591		ERJ3GEYJ473	M.RESISTOR CH 1/16W 47K	1	
R4592		ERJ3GEYJ563	M.RESISTOR CH 1/16W 56K	1	
R4593		ERJ3GEYJ472	M.RESISTOR CH 1/16W 4.7K	1	
R4594		ERJ3GEYJ473	M.RESISTOR CH 1/16W 47K	1	
R4596		ERJ3GEYG473	M.RESISTOR CH 1/16W 47K	1	
R4597		ERJ3GEYJ103	M.RESISTOR CH 1/16W 10K	1	
R4598,99		ERJ3GEYG104	M.RESISTOR CH 1/16W 100K	2	
R4603		ERJ3GEYG183	M.RESISTOR CH 1/16W 18K	1	
R4606		VRE0071E562	M.RESISTOR	1	
R4610		ERJ3GEYJ473	M.RESISTOR CH 1/16W 47K	1	
R4611		ERJ3GEYJ101	M.RESISTOR CH 1/16W 100	1	
R4612		VRE0071E331	M.RESISTOR CH 1/10W	1	
R4613		ERJ3GEYG394	M.RESISTOR CH 1/16W 390K	1	
R4615		VRE0071E133	M.RESISTOR CH 1/10W	1	
R4616		ERJ3GEYJ105	M.RESISTOR CH 1/16W 1M	1	

Ref.No.		Part No.	Part Name & Description	Pcs	Remarks
R4649		ERJ3GEYJ470	M.RESISTOR CH 1/16W 47	1	
R4651		ERJ3GEYJ471	M.RESISTOR CH 1/16W 470	1	
R4653		ERJ3GEYJ821	M.RESISTOR CH 1/16W 820	1	
R4654		ERJ3GEYJ223	M.RESISTOR CH 1/16W 22K	1	
R4655		ERJ3GEYJ562	M.RESISTOR CH 1/16W 5.6K	1	
R4656		ERJ3GEYG243	M.RESISTOR CH 1/16W 24K	1	
R4657		ERJ3GEYJ392	M.RESISTOR CH 1/16W 3.9K	1	
R4666		ERJ3GEYJ471	M.RESISTOR CH 1/16W 470	1	
R4670		ERJ3GEYJ822	M.RESISTOR CH 1/16W 8.2K	1	
R4671		ERJ3GEY0R00	M.RESISTOR CH 1/16W 0	1	
R6001		ERJ6GMYJ103	M.RESISTOR CH 1/10W 10K	1	
R6002		ERJ6GMYG272	M.RESISTOR CH 1/10W 2.7K	1	
R6004		ERJ6GMYJ102	M.RESISTOR CH 1/10W 1K	1	
R6005-07		ERJ6GMYJ333	M.RESISTOR CH 1/10W 33K	3	
R6008		ERJ6GMYJ272	M.RESISTOR CH 1/10W 2.7K	1	
R6009-11		ERJ6GMYJ102	M.RESISTOR CH 1/10W 1K	3	
R6012		ERJ6GMYJ272	M.RESISTOR CH 1/10W 2.7K	1	
R6013		ERDS2CKG2000	M.RESISTOR 1/4W 200	1	
R6014,15		ERJ6GMYG223	M.RESISTOR CH 1/10W 22K	2	
R6016		ERJ6GMYJ103	M.RESISTOR CH 1/10W 10K	1	
R6017		ERJ6GMYJ271	M.RESISTOR CH 1/10W 270	1	
R6018		ERJ6GMYJ683	M.RESISTOR CH 1/10W 68K	1	
R6019		ERJ6GMYJ103	M.RESISTOR CH 1/10W 10K	1	
R6020		ERJ6GMYJ222	M.RESISTOR CH 1/10W 2.2K	1	
R6021		ERJ6GMYJ103	M.RESISTOR CH 1/10W 10K	1	
R6022		ERJ6GMYJ101	M.RESISTOR CH 1/10W 100	1	
R6023		ERJ6GMYJ104	M.RESISTOR CH 1/10W 100K	1	
R6024-29		ERJ6GMYJ102	M.RESISTOR CH 1/10W 1K	6	
R6030,31		ERJ6GMYJ103	M.RESISTOR CH 1/10W 10K	2	
R6032,33		ERJ6GMYJ272	M.RESISTOR CH 1/10W 2.7K	2	
R6034,35		ERJ6GMYJ221	M.RESISTOR CH 1/10W 220	2	
R6036		ERJ6GMYJ104	M.RESISTOR CH 1/10W 100K	1	
R6037		ERJ6GMYJ224	M.RESISTOR CH 1/10W 220K	1	
R6038		ERJ6GMYJ223	M.RESISTOR CH 1/10W 22K	1	
R6039		ERJ6GMYJ183	M.RESISTOR CH 1/10W 18K	1	
R6040		ERJ6GMYJ333	M.RESISTOR CH 1/10W 33K	1	
R6042		ERJ6GMYJ103	M.RESISTOR CH 1/10W 10K	1	
R6043		ERJ6GMYJ332	M.RESISTOR CH 1/10W 3.3K	1	
R6044		ERJ6GMYJ222	M.RESISTOR CH 1/10W 2.2K	1	
R6048		ERJ6GMYJ332	M.RESISTOR CH 1/10W 3.3K	1	
R6049		ERJ6GMYJ152	M.RESISTOR CH 1/10W 1.5K	1	
R6050		ERJ6GMYJ332	M.RESISTOR CH 1/10W 3.3K	1	
R6051		ERJ6GMYJ472	M.RESISTOR CH 1/10W 4.7K	1	
R7001,02		ERJ6GMYJ151	M.RESISTOR CH 1/10W 150	2	
R7004		ERJ6GMYJ472	M.RESISTOR CH 1/10W 4.7K	1	
R7302		ERJ3GEYJ392	M.RESISTOR CH 1/16W 3.9K	1	
R7303		ERJ3GEYJ182	M.RESISTOR CH 1/16W 1.8K	1	
R7304		ERJ3GEYJ392	M.RESISTOR CH 1/16W 3.9K	1	
R7305		ERJ3GEYJ822	M.RESISTOR CH 1/16W 8.2K	1	
R7306		ERJ3GEYJ471	M.RESISTOR CH 1/16W 470	1	
R7307		ERJ3GEYJ104	M.RESISTOR CH 1/16W 100K	1	
R7308		ERJ3GEYJ273	M.RESISTOR CH 1/16W 27K	1	
R7309		ERDS2TJ102	C.RESISTOR 1/4W 1K	1	
R7310		ERJ3GEYJ474	M.RESISTOR CH 1/16W 470K	1	
R7311		ERJ3GEYJ562	M.RESISTOR CH 1/16W 5.6K	1	
R7312		ERJ3GEYJ563	M.RESISTOR CH 1/16W 56K	1	
R7313		ERJ3GEYJ824	M.RESISTOR CH 1/16W 820K	1	
R7314,15		ERJ3GEYJ224	M.RESISTOR CH 1/16W 220K	2	
R7316		ERJ3GEYJ473	M.RESISTOR CH 1/16W 47K	1	
R7317		ERJ3GEYJ393	M.RESISTOR CH 1/16W 39K	1	
R7318		ERJ3GEYJ153	M.RESISTOR CH 1/16W 15K	1	
R7321		ERJ3GEYJ103	M.RESISTOR CH 1/16W 10K	1	
R7322		ERJ3GEYJ102	M.RESISTOR CH 1/16W 1K	1	
R7323		ERJ3GEYJ103	M.RESISTOR CH 1/16W 10K	1	
R7324,25		ERJ3GEYJ271	M.RESISTOR CH 1/16W 270	2	
R7329		ERJ3GEYJ102	M.RESISTOR CH 1/16W 1K	1	
R7330		ERJ3GEYJ332	M.RESISTOR CH 1/16W 3.3K	1	
R7334-37		ERJ3GEYJ471	M.RESISTOR CH 1/16W 470	4	
R7338		ERJ3GEYJ182	M.RESISTOR CH 1/16W 1.8K	1	
R7339		ERJ3GEYJ330	M.RESISTOR CH 1/16W 33	1	
R7340		ERJ3GEYJ152	M.RESISTOR CH 1/16W 1.5K	1	
R7341		ERJ3GEYJ681	M.RESISTOR CH 1/16W 680	1	
R7342		ERJ3GEYJ103	M.RESISTOR CH 1/16W 10K	1	
R7345		ERJ3GEYJ182	M.RESISTOR CH 1/16W 1.8K	1	
R7346		ERJ3GEYJ221	M.RESISTOR CH 1/16W 220	1	

Ref.No.		Part No.	Part Name & Description	Pcs	Remarks
R7347		ERJ3GEYJ681	M.RESISTOR CH 1/16W 680	1	
R7348		ERJ3GEYJ222	M.RESISTOR CH 1/16W 2.2K	1	
R7351-53		ERJ3GEYJ103	M.RESISTOR CH 1/16W 10K	3	
R7354,55		ERJ3GEYJ102	M.RESISTOR CH 1/16W 1K	2	
R7356-58		ERJ3GEYJ223	M.RESISTOR CH 1/16W 22K	3	
R7359		ERJ3GEYJ822	M.RESISTOR CH 1/16W 8.2K	1	
R7360-62		ERJ3GEYJ154	M.RESISTOR CH 1/16W 150K	3	
R7363		ERJ3GEYJ124	M.RESISTOR CH 1/16W 120K	1	
R7364		ERJ3GEYJ683	M.RESISTOR CH 1/16W 68K	1	
R7671,72		ERJ3GEYJ473	M.RESISTOR CH 1/16W 47K	2	
R7673		ERJ3GEYJ104	M.RESISTOR CH 1/16W 100K	1	
R7674		ERJ3GEYJ124	M.RESISTOR CH 1/16W 120K	1	
R7675		ERJ3GEYJ103	M.RESISTOR CH 1/16W 10K	1	
R7676		ERG1SJ152	M.RESISTOR 1W 1.5K	1	
R7677		ERJ3GEYJ103	M.RESISTOR CH 1/16W 10K	1	
R7678		ERJ3GEYJ223	M.RESISTOR CH 1/16W 22K	1	
R7679		VRE0040E100	M.RESISTOR CH 1/10W 10	1	
R7680		ERJ3GEYJ102	M.RESISTOR CH 1/16W 1K	1	
R7691		ERJ3GEYJ103	M.RESISTOR CH 1/16W 10K	1	
R7695		ERJ3GEYJ562	M.RESISTOR CH 1/16W 5.6K	1	
R7696		ERJ3GEYJ473	M.RESISTOR CH 1/16W 47K	1	
R8001		ERJ6GEYJ102	M.RESISTOR CH 1/10W 1K	1	
R8002,03		ERJ6GMYJ102	M.RESISTOR CH 1/10W 1K	2	
R8004		ERJ6GMYJ821	M.RESISTOR CH 1/10W 820	1	
R8005		ERJ6GMZ0R00	M.RESISTOR 1/10W 0	1	
R8007		ERJ6GMZ0R00	M.RESISTOR 1/10W 0	1	
R8008,09		ERJ6GMYJ102	M.RESISTOR CH 1/10W 1K	2	
R8010		ERJ6GEYG911	M.RESISTOR CH 1/10W 910	1	
R8011		ERJ6GMYJ102	M.RESISTOR CH 1/10W 1K	1	
R8014		ERJ6GMYJ471	M.RESISTOR CH 1/10W 470	1	
R8015		ERJ6GMYJ222	M.RESISTOR CH 1/10W 2.2K	1	
R8016		ERJ6GMYJ181	M.RESISTOR CH 1/10W 180	1	
SW3901		VSS0233	SWITCH	1	
T703		EIV5EC063A	TRANSFORMER	1	
T704		EIV5EC040A	TRANSFORMER	1	
T711		EIS5EC008A	TRANSFORMER	1	
T4001		EIQ7QP014Q	TRANSFORMER	1	
T7301		EIR7QG001B	TRANSFORMER	1	
T7302,03		EIL7QH012Q	TRANSFORMER	2	
T7304		EIS5EC007A	TRANSFORMER	1	
T7305		EIS5EC005A	TRANSFORMER	1	
TR		VJS3481	CONNECTOR (FEMALE)	1	
VR701		EVNCBAA00B23	V.RESISTOR	1	
VR751		EVNCBAA00B53	V.RESISTOR	1	
VR803		EVNCBAA00B14	V.RESISTOR	1	
VR2001		EVNDXAA00B54	V.RESISTOR 50K	1	
VR2006		EVNDXAA00B15	V.RESISTOR 100K	1	
VR2011		EVNDXAA00B15	V.RESISTOR 100K	1	
VR3001		EVNDXAA00B23	V.RESISTOR 5K	1	
VR3012,13		EVNDXAA00B52	V.RESISTOR 500	2	
VR4001		EVNDXAA00B25	V.RESISTOR 200K	1	
VR4501		EVMECSA00B53	V.RESISTOR	1	
VR4502		EVMEASA00BY4	V.RESISTOR	1	
VR4507		EVMEASA00BY4	V.RESISTOR	1	
VR4509		EVMECSA00BY3	V.RESISTOR	1	
VR4550		EVMECSA00BS3	V.RESISTOR	1	
VR4551,52		EVMEASA00B55	V.RESISTOR	2	
VR7301		EVTEASA00B14	V.RESISTOR	1	
VR7326		EVTEASA00B52	V.RESISTOR	1	
VR7328		EVTEASA00B52	V.RESISTOR	1	
VR7340		EVNCBAA00B14	V.RESISTOR	1	
VR7342		EVNCBAA00B14	V.RESISTOR	1	
VR7344		EVNCBAA00B14	V.RESISTOR	1	
VR8001		EVNDXAA00B23	V.RESISTOR 5K	1	
X710		EFCH38MW3	CRYSTAL OSCILLATOR	1	

Ref.No.		Part No.	Part Name & Description	Pcs	Remarks
X711		EFCS3F02W3B	CRYSTAL OSCILLATOR	1	
X712		EFCS6R0MS5	CRYSTAL OSCILLATOR	1	
X714		VSX0553	CRYSTAL OSCILLATOR	1	
X715		VSX0547	CRYSTAL OSCILLATOR	1	
X716		EFCS4504BFB	CRYSTAL OSCILLATOR	1	
X717		EFCS5744BF	CRYSTAL OSCILLATOR	1	
X718		EFCH32MWP1	CRYSTAL OSCILLATOR	1	
X719		EFCS4504BFB	CRYSTAL OSCILLATOR	1	
X720		EFCS6004BF	CRYSTAL OSCILLATOR	1	
X801		VSX0162	CRYSTAL OSCILLATOR	1	
X3001		VSX0099	CRYSTAL OSCILLATOR	1	
X6001		VSX0609	CRYSTAL OSCILLATOR	1	
X7301,02		EFCS5R5MS5B	CRYSTAL OSCILLATOR	2	
X7303,04		EFCS5R74MS5B	CRYSTAL OSCILLATOR	2	
X7305		ELB5A016	CRYSTAL OSCILLATOR	1	
X8001		VSX0473	CRYSTAL OSCILLATOR	1	
			MISCELLANEOUS		
		ENC17992A	RF CONVERTER	1	<!>
		VJH0756	I/O JACK PLATE	1	
		VEE8474	WIRE CABLE	1	(P2001-P2902)
		VEE8564	WIRE CABLE	1	(P2003-POWER TR.)
		VEE8969	WIRE CABLE	1	(P4002-FE HEAD)
		VWJ25C9200BB	FLAT CARD CABLE	1	(P6001-P7501)
		VWJ12C9200BB	FLAT CARD CABLE	1	(P6002-P7502)
		VWJ0745	FLAT CARD CABLE	1	(P3001-P501)
		VWJ0746	FLAT CARD CABLE	1	(P6004-P1505)
		VWJ0825	FLAT CARD CABLE	1	(P2002-CAPSTAN)
		VWJ0826B	FLAT CARD CABLE	1	(P1001-P1102)
		VJF1031	CLAMPER	1	
		ENV598B1H3	TUNER	1	<!>FOR TV DEMODU.
		VSC4025	SHIELD COVER (MAIN)	1	FOR TV DEMODULATOR
		VSC3815	SHIELD COVER (TOP)	1	FOR TV DEMODULATOR
	■	VEP03A88L	MAIN C.B.A.		(RTL)NV-HD77AM
C305		ECUM1H470JCN	C.CAPACITOR CH 50V 47P	1	
C306,07		ECUM1H104ZFN	C.CAPACITOR CH 50V 0.1U	2	
C308		ECEA1EKN4R7	E.CAPACITOR 25V 4.7U	1	
C310		ECEA1CK220	E.CAPACITOR 16V 22U	1	
C311		ECEA0JK101	E.CAPACITOR 6.3V 100U	1	
C312		ECUM1H104ZFN	C.CAPACITOR CH 50V 0.1U	1	
C313,14		ECUM1H103ZFN	C.CAPACITOR CH 50V 0.01U	2	
C315		ECUM1H560JCN	C.CAPACITOR CH 50V 56P	1	
C319		ECEA0JK101	E.CAPACITOR 6.3V 100U	1	
C320		ECUM1H820JCN	C.CAPACITOR CH 50V 82P	1	
C321		ECUM1H333KBN	C.CAPACITOR CH 50V 0.033U	1	
C701,02		ECEA1CK100	E.CAPACITOR 16V 10U	2	
C705		ECEA1CK220	E.CAPACITOR 16V 22U	1	
C706		ECQV1H104JM	P.CAPACITOR 50V 0.1U	1	
C707		ECEA1HKR47	E.CAPACITOR 50V 0.47U	1	
C708		ECEA1CK220	E.CAPACITOR 16V 22U	1	
C709		ECEA1CK100	E.CAPACITOR 16V 10U	1	
C710		ECUX1H103ZFV	C.CAPACITOR CH 50V 0.01U	1	
C711		ECEA1CK100	E.CAPACITOR 16V 10U	1	
C712		ECQB1H822JH	P.CAPACITOR 50V 8200P	1	
C713		ECQV1H333JZ	P.CAPACITOR 50V 0.033U	1	
C714		ECUX1H103ZFV	C.CAPACITOR CH 50V 0.01U	1	
C715		ECUM1H151JCN	C.CAPACITOR CH 50V 150P	1	
C716		ECUM1H331JCN	C.CAPACITOR CH 50V 330P	1	
C717		ECEA1HK0R1	E.CAPACITOR 50V 0.1U	1	
C718-20		ECUX1H103ZFV	C.CAPACITOR CH 50V 0.01U	3	
C721		ECEA1CK470	E.CAPACITOR 16V 47U	1	
C722		ECUX1H103ZFV	C.CAPACITOR CH 50V 0.01U	1	
C723		ECUM1H120JCN	C.CAPACITOR CH 50V 12P	1	
C724		ECUM1H470JPN	C.CAPACITOR CH 50V 47P	1	
C725		ECQV1H473JZ	P.CAPACITOR 50V 0.047U	1	
C726		ECUX1H103ZFV	C.CAPACITOR CH 50V 0.01U	1	
C727		ECUM1H270JCN	C.CAPACITOR CH 50V 27P	1	
C728		ECEA1HKR47	E.CAPACITOR 50V 0.47U	1	
C729		ECUX1H390JCV	C.CAPACITOR CH 50V 39P	1	

Ref.No.		Part No.	Part Name & Description	Pcs	Remarks
C730-32		ECUX1H103ZFV	C.CAPACITOR CH 50V 0.01U	3	
C733		ECEA1HK2R2	E.CAPACITOR 50V 2.2U	1	
C734		ECQV1H104JM	P.CAPACITOR 50V 0.1U	1	
C735		ECEA1CK470	E.CAPACITOR 16V 47U	1	
C736-42		ECUX1H103ZFV	C.CAPACITOR CH 50V 0.01U	7	
C752		ECUX1H820JCV	C.CAPACITOR CH 50V 82P	1	
C754,55		ECUX1H103ZFV	C.CAPACITOR CH 50V 0.01U	2	
C756		ECEA1CK470	E.CAPACITOR 16V 47U	1	
C757		ECUX1H470JCV	C.CAPACITOR CH 50V 47P	1	
C758,59		ECUX1H103ZFV	C.CAPACITOR CH 50V 0.01U	2	
C760		ECEA1HK0R1	E.CAPACITOR 50V 0.1U	1	
C761		ECUX1H103ZFV	C.CAPACITOR CH 50V 0.01U	1	
C762		ECEA1CK100	E.CAPACITOR 16V 10U	1	
C763-67		ECUX1H103ZFV	C.CAPACITOR CH 50V 0.01U	5	
C790		ECUX1H100DCV	C.CAPACITOR CH 50V 10P	1	
C796		ECUX1H150JCV	C.CAPACITOR CH 50V 15P	1	
C797-99		ECUX1H103ZFV	C.CAPACITOR CH 50V 0.01U	3	
C805		ECEA0JK221	E.CAPACITOR 6.3V 220	1	
C806		ECUM1H104ZFN	C.CAPACITOR CH 50V 0.1U	1	
C807		ECUM1H181JCN	C.CAPACITOR CH 50V 180P	1	
C808		ECUM1H270JCN	C.CAPACITOR CH 50V 27P	1	
C809		ECUM1H103ZFN	C.CAPACITOR CH 50V 0.01U	1	
C812-14		ECUM1H103ZFN	C.CAPACITOR CH 50V 0.01U	3	
C815		ECUM1H560JCN	C.CAPACITOR CH 50V 56P	1	
C816		ECUM1H103ZFN	C.CAPACITOR CH 50V 0.01U	1	
C817		ECUM1H560JCN	C.CAPACITOR CH 50V 56P	1	
C818		ECUM1H103ZFN	C.CAPACITOR CH 50V 0.01U	1	
C819		ECUM1H470JCN	C.CAPACITOR CH 50V 47P	1	
C820-25		ECUM1H103ZFN	C.CAPACITOR CH 50V 0.01U	6	
C826		ECEA0JK101	E.CAPACITOR 6.3V 100U	1	
C827		ECUM1H103ZFN	C.CAPACITOR CH 50V 0.01U	1	
C828		ECUM1H470JCN	C.CAPACITOR CH 50V 47P	1	
C829		ECUM1H103ZFN	C.CAPACITOR CH 50V 0.01U	1	
C830		ECEA1HK0R1	E.CAPACITOR 50V 0.1U	1	
C831		ECQB1H332JH	P.CAPACITOR 50V 0.27U	1	
C832		ECUM1H331JCN	C.CAPACITOR CH 50V 330P	1	
C838		ECUM1H104ZFN	C.CAPACITOR CH 50V 0.1U	1	
C839		ECUM1H100DCN	C.CAPACITOR CH 50V 10P	1	
C841		ECUM1H102KBN	C.CAPACITOR CH 50V 1000P	1	
C842		ECEA0JK101	E.CAPACITOR 6.3V 100U	1	
C843		ECUM1H104ZFN	C.CAPACITOR CH 50V 0.1U	1	
C845		ECEA1HK010	E.CAPACITOR 50V 1U	1	
C846		ECUM1H103ZFN	C.CAPACITOR CH 50V 0.01U	1	
C848-50		ECUM1H103ZFN	C.CAPACITOR CH 50V 0.01U	3	
C1001		ECA1EM101	E.CAPACITOR 25V 100U	1	
C1002		ECEA1AFS221	E.CAPACITOR 10V 220U	1	
C1003		ECEA0JKA330	E.CAPACITOR 6.3V 33U	1	
C1004		ECEA1CKA330	E.CAPACITOR 16V 33U	1	
C1005		ECEA1CKA100	E.CAPACITOR 16V 10U	1	
C1006		ECUM1H103ZFN	C.CAPACITOR CH 50V 0.01U	1	
C2001		ECUM1H104ZFN	C.CAPACITOR CH 50V 0.1U	1	
C2002		ECUM1H103ZFN	C.CAPACITOR CH 50V 0.01U	1	
C2003		ECEA1CKA470	E.CAPACITOR 16V 47U	1	
C2004		ECEA1CKA101	E.CAPACITOR 16V 100U	1	
C2005,06		ECEA1HKNR47	E.CAPACITOR 50V 0.47U	2	
C2007		ECUM1H103ZFN	C.CAPACITOR CH 50V 0.01U	1	
C2008		ECEA1HKA2R2	E.CAPACITOR 50V 2.2U	1	
C2009,10		ECUM1H680JCN	C.CAPACITOR CH 50V 68P	2	
C2011,12		ECUM1H333KBN	C.CAPACITOR CH 50V 0.033U	2	
C2013		ECQV1H334JM	P.CAPACITOR 50V 0.33U	1	
C2014		ECUM1H333KBN	C.CAPACITOR CH 50V 0.033U	1	
C2015,16		ECEA1HKA2R2	E.CAPACITOR 50V 2.2U	2	
C2017		ECEA1HKAR22	E.CAPACITOR 50V 0.22U	1	
C2018,19		ECUM1H333KBN	C.CAPACITOR CH 50V 0.033U	2	
C2020		ECUM1H103ZFN	C.CAPACITOR CH 50V 0.01U	1	
C2021		ECAOJM221	E.CAPACITOR 6.3V 220U	1	
C2022		ECEA1CKA470	E.CAPACITOR 16V 47U	1	
C2023		ECUM1H104ZFN	C.CAPACITOR CH 50V 0.1U	1	
C2024		ECEA1CKA100	E.CAPACITOR 16V 10U	1	
C2025,26		ECUM1C105ZFN	C.CAPACITOR CH 16V 1U	2	
C2027		ECEA1HKA3R3	E.CAPACITOR 50V 3.3U	1	
C2028		ECEA1HKN3R3	E.CAPACITOR 50V 3.3U	1	
C2029		ECUM1H471JCN	C.CAPACITOR CH 50V 470P	1	
C2030		ECUM1H222KBN	C.CAPACITOR CH 50V 2200P	1	
C2031		ECUM1H392KBN	C.CAPACITOR CH 50V 3900P	1	

Ref.No.		Part No.	Part Name & Description	Pcs	Remarks
C2032		ECUM1H223KBN	C.CAPACITOR CH 50V 0.022U	1	
C2033		ECAOJM221	E.CAPACITOR 6.3V 220U	1	
C2034		ECEA1CKA100	E.CAPACITOR 16V 10U	1	
C2035		ECEA1HKA3R3	E.CAPACITOR 50V 3.3U	1	
C2036		ECEA0JKA220	E.CAPACITOR 6.3V 22U	1	
C2037		ECUM1H103ZFN	C.CAPACITOR CH 50V 0.01U	1	
C2038		ECUM1H104ZFN	C.CAPACITOR CH 50V 0.1U	1	
C2039		ECEA1HKA4R7	E.CAPACITOR 50V 4.7U	1	
C2040		ECUM1H222KBN	C.CAPACITOR CH 50V 2200P	1	
C2041		ECUM1H333KBN	C.CAPACITOR CH 50V 0.033U	1	
C2042		ECQV1H683JM	P.CAPACITOR 50V 0.068U	1	
C2043		ECEA1CKA470	E.CAPACITOR 16V 47U	1	
C2044		ECEA1HKA010	E.CAPACITOR 50V 1U	1	
C2045		ECEA1CKA470	E.CAPACITOR 16V 47U	1	
C2046		ECEA1HKAR47	E.CAPACITOR 50V 0.47U	1	
C2047		ECQV1H683JM	P.CAPACITOR 50V 0.068U	1	
C2048		ECEA1CKA470	E.CAPACITOR 16V 47U	1	
C2049		ECEA0JKA470	E.CAPACITOR 6.3V 47U	1	
C2050		ECUM1H101JCN	C.CAPACITOR CH 50V 100P	1	
C2051		ECUM1H104ZFN	C.CAPACITOR CH 50V 0.1U	1	
C2052		ECAOJM101	E.CAPACITOR 6.3V 100P	1	
C3001		ECUM1H102KBN	C.CAPACITOR CH 50V 1000P	1	
C3002,03		ECUM1H104ZFN	C.CAPACITOR CH 50V 0.1U	2	
C3004		ECUM1H103ZFN	C.CAPACITOR CH 50V 0.01U	1	
C3005		ECUM1H104ZFN	C.CAPACITOR CH 50V 0.1U	1	
C3006		ECUM1H103ZFN	C.CAPACITOR CH 50V 0.01U	1	
C3007		ECEA0JKA221	E.CAPACITOR 6.3V 220U	1	
C3008		ECEA1CKA100	E.CAPACITOR 16V 10U	1	
C3009		ECUM1H103ZFN	C.CAPACITOR CH 50V 0.01U	1	
C3010		ECEA0JKA470	E.CAPACITOR 6.3V 47U	1	
C3011		ECUM1H103ZFN	C.CAPACITOR CH 50V 0.01U	1	
C3012		ECUM1H620JCN	C.CAPACITOR CH 50V 62P	1	
C3013		ECUM1H330JCN	C.CAPACITOR CH 50V 33P	1	
C3014		ECUM1H680JCN	C.CAPACITOR CH 50V 68P	1	
C3015		ECUM1H220JCN	C.CAPACITOR CH 50V 22P	1	
C3016		ECUM1H151JCN	C.CAPACITOR CH 50V 150P	1	
C3017		ECUM1H103ZFN	C.CAPACITOR CH 50V 0.01U	1	
C3019		ECUM1H220JCN	C.CAPACITOR CH 50V 22P	1	
C3020		ECUM1H180JCN	C.CAPACITOR CH 50V 18P	1	
C3021		ECAOJM471	E.CAPACITOR 6.3V 470	1	
C3022		ECUM1H103ZFN	C.CAPACITOR CH 50V 0.01U	1	
C3023		ECEA1CKA470	E.CAPACITOR 16V 47U	1	
C3024		ECUM1H104ZFN	C.CAPACITOR CH 50V 0.1U	1	
C3025		ECEA0JKA470	E.CAPACITOR 6.3V 47U	1	
C3026,27		ECEA1CKA100	E.CAPACITOR 16V 10U	2	
C3028,29		ECUM1H332KBN	C.CAPACITOR CH 50V 3300P	2	
C3030		ECEA1CKA100	E.CAPACITOR 16V 10U	1	
C3031		ECUM1H102KBN	C.CAPACITOR CH 50V 1000P	1	
C3032		ECUM1H103ZFN	C.CAPACITOR CH 50V 0.01U	1	
C3033		ECUM1H681JCN	C.CAPACITOR 50V 680P	1	
C3034		ECUM1H104ZFN	C.CAPACITOR CH 50V 0.1U	1	
C3035		ECUM1H181JCN	C.CAPACITOR CH 50V 180P	1	
C3036		ECUM1H220JCN	C.CAPACITOR CH 50V 22P	1	
C3038		ECEA1AFS221	E.CAPACITOR 10V 220U	1	
C3905,06		ECUM1H821JCN	C.CAPACITOR CH 50V 820P	2	
C3911		ECEA1CKA100	E.CAPACITOR 16V 10U	1	
C3914,15		ECUM1C105ZFN	C.CAPACITOR CH 16V 1U	2	
C4001		ECUM1H103ZFN	C.CAPACITOR CH 50V 0.01U	1	
C4002		ECKD2H331KB	C.CAPACITOR 500V 330P	1	
C4003		ECQP1332JZ	P.CAPACITOR 50V 3300P	1	
C4004		ECQB1H102JZ	P.CAPACITOR 50V 1000P	1	
C4005		ECQB1H153JZ	P.CAPACITOR 50V 0.015U	1	
C4006		ECEA16M33	E.CAPACITOR 16V 33U	1	
C4007		ECUM1H221JCN	C.CAPACITOR CH 50V 220P	1	
C4008		ECUM1H681JCN	C.CAPACITOR 50V 680P	1	
C4010		ECUM1H683ZFN	C.CAPACITOR CH 50V 0.068U	1	
C4034		ECEA1HKA010	E.CAPACITOR 50V 1U	1	
C4503		ECUX1H152KBV	C.CAPACITOR CH 50V 1500P	1	
C4504,05		ECEA1CU470	E.CAPACITOR 16V 47U	2	
C4506		ECEA1CU100	E.CAPACITOR 16V 10U	1	
C4507		ECQB1H223JA	P.CAPACITOR 50V 0.022U	1	
C4508		ECEA1EKN4R7	E.CAPACITOR 25V 4.7U	1	
C4509		ECEA1AU470	E.CAPACITOR 10V 47U	1	
C4510		ECQB1H103JA	P.CAPACITOR 50V 0.01U	1	
C4511		ECQB1H332JA	P.CAPACITOR 50V 3300P	1	

Ref.No.		Part No.	Part Name & Description	Pcs	Remarks
C4512		ECUX1H561JV	C.CAPACITOR CH 50V 560P	1	
C4513		ECUX1H681JV	C.CAPACITOR CH 50V 680P	1	
C4514		ECUX1H561JV	C.CAPACITOR CH 50V 560P	1	
C4515		ECEA1EU4R7	E.CAPACITOR 25V 4.7U	1	
C4517		ECEA1AU101	E.CAPACITOR 10V 100U	1	
C4518		ECUX1C104ZFV	C.CAPACITOR CH 16V 0.1U	1	
C4521		ECUM1E473KBN	C.CAPACITOR CH 25V 0.047U	1	
C4522		ECEA1HU3R3	E.CAPACITOR 50V 3.3U	1	
C4524		ECEA1AU101	E.CAPACITOR 10V 100U	1	
C4528		ECUX1C104ZFV	C.CAPACITOR CH 16V 0.1U	1	
C4530		ECEA0JU470	E.CAPACITOR 6.3V 47U	1	
C4533		ECEA1AU330	E.CAPACITOR 10V 33U	1	
C4537		ECUX1H102JCV	C.CAPACITOR CH 50V 1000P	1	
C4538		ECEA1HUR47	E.CAPACITOR 50V 0.47U	1	
C4539		ECUM1C224ZFV	C.CAPACITOR CH 16V 0.22U	1	
C4541		ECUX1C104ZFV	C.CAPACITOR CH 16V 0.1U	1	
C4545		ECUX1H102JCV	C.CAPACITOR CH 50V 1000P	1	
C4551		ECQB1H223JA	P.CAPACITOR 50V 0.022U	1	
C4556		ECEA1CU100	E.CAPACITOR 16V 10U	1	
C4558		ECEA1EKN4R7	E.CAPACITOR 25V 4.7U	1	
C4559		ECEA1AU470	E.CAPACITOR 10V 47U	1	
C4560		ECQB1H103JA	P.CAPACITOR 50V 0.01U	1	
C4561		ECQB1H332JA	P.CAPACITOR 50V 3300P	1	
C4562		ECUX1H561JV	C.CAPACITOR CH 50V 560P	1	
C4563		ECUX1H681JV	C.CAPACITOR CH 50V 680P	1	
C4564		ECUX1H561JV	C.CAPACITOR CH 50V 560P	1	
C4565		ECEA1EU4R7	E.CAPACITOR 25V 4.7U	1	
C4567		ECEA1AU101	E.CAPACITOR 10V 100U	1	
C4568		ECUX1C104ZFV	C.CAPACITOR CH 16V 0.1U	1	
C4572		ECEA1HU3R3	E.CAPACITOR 50V 3.3U	1	
C4576		ECUM1E473KBN	C.CAPACITOR CH 25V 0.047U	1	
C4583		ECEA1AU330	E.CAPACITOR 10V 33U	1	
C4585,86		ECEA1AU101	E.CAPACITOR 10V 100U	2	
C4591		ECUX1C104ZFV	C.CAPACITOR CH 16V 0.1U	1	
C4592		ECUX1H152KBV	C.CAPACITOR CH 50V 1500P	1	
C4593		ECUX1H221JCV	C.CAPACITOR CH 50V 220P	1	
C4594,95		ECUX1H101JCV	C.CAPACITOR CH 50V 100P	2	
C4596		ECEA1CU100	E.CAPACITOR 16V 10U	1	
C4597		ECUX1H330JCV	C.CAPACITOR CH 50V 33P	1	
C4604		ECUM1H182JN	C.CAPACITOR CH 50V 1800P	1	
C4606		ECEA0JKA470	E.CAPACITOR 6.3V 47U	1	
C4611		ECQB1H562JZ	P.CAPACITOR 50V 5600P	1	
C4616		ECUX1H102JCV	C.CAPACITOR CH 50V 1000P	1	
C4617		ECEA1OM22	E.CAPACITOR 10V 22U	1	
C4618		ECQB1H822JZ	P.CAPACITOR 50V 8200P	1	
C4621		ECEA0JKA101	E.CAPACITOR 6.3V 100U	1	
C4629		ECQB1H123JZ	E.CAPACITOR 50V 0.012U	1	
C4636		ECUX1H151JCV	C.CAPACITOR CH 50V 150P	1	
C4638		ECQB1H272JZ	P.CAPACITOR 50V 2700P	1	
C4652,53		ECUM1C105ZFN	C.CAPACITOR CH 16V 1U	2	
C6001		ECUM1H104ZFN	C.CAPACITOR CH 50V 0.1U	1	
C6002		ECUM1H103ZFN	C.CAPACITOR CH 50V 0.01U	1	
C6003		ECEA1HKA2R2	E.CAPACITOR 50V 2.2U	1	
C6004		ECUM1H221JCN	C.CAPACITOR CH 50V 220P	1	
C6005		ECUM1H223KBN	C.CAPACITOR CH 50V 0.022U	1	
C6006		ECUM1H472KBN	C.CAPACITOR CH 50V 4700P	1	
C6007,08		ECUM1H220JCN	C.CAPACITOR CH 50V 22P	2	
C6009		ECEA0JKA220	E.CAPACITOR 6.3V 22U	1	
C6010		ECQV1H104JM	P.CAPACITOR 50V 0.1U	1	
C6011		ECUM1H392KBN	C.CAPACITOR CH 50V 3900P	1	
C6012		ECUM1H103ZFN	C.CAPACITOR CH 50V 0.01U	1	
C6013		ECUM1H104ZFN	C.CAPACITOR CH 50V 0.1U	1	
C6014		ECEA0JKA220	E.CAPACITOR 6.3V 22U	1	
C6015,16		ECUM1H271JCN	C.CAPACITOR CH 50V 270P	2	
C6017		ECUM1H103ZFN	C.CAPACITOR CH 50V 0.01U	1	
C6018		ECUM1H102KBN	C.CAPACITOR CH 50V 1000P	1	
C6019		ECEA1CKA100	E.CAPACITOR 16V 10U	1	
C6025-28		ECUM1H103ZFN	C.CAPACITOR CH 50V 0.01U	4	
C7005		ECUM1C105ZFN	C.CAPACITOR CH 16V 1U	1	
C7006		ECEA1AKN100	E.CAPACITOR 10V 10U	1	
C7007		ECUM1H103ZFN	C.CAPACITOR CH 50V 0.01U	1	
C7010		ECEA1CKA100	E.CAPACITOR 16V 10U	1	
C7011		ECUM1H103ZFN	C.CAPACITOR CH 50V 0.01U	1	
C7012		ECUM1H104ZFN	C.CAPACITOR CH 50V 0.1U	1	
C7302		ECEA1CKN100	E.CAPACITOR 16V 10U	1	

Ref.No.		Part No.	Part Name & Description	Pcs	Remarks
C7303		ECQV1H393JZ	P.CAPACITOR 50V 0.039U	1	
C7304		ECEA1CKN100	E.CAPACITOR 16V 10U	1	
C7305		ECQV1H473JZ	P.CAPACITOR 50V 0.047U	1	
C7306		ECQB1H102KZ	P.CAPACITOR 50V 1000P	1	
C7307		ECQB1H822KZ	P.CAPACITOR 50V 8200P	1	
C7308		ECQB1H102KZ	P.CAPACITOR 50V 1000P	1	
C7309		ECQB1H152KZ	F.CAPACITOR 50V 1500P	1	
C7310		ECEA1CK100	E.CAPACITOR 16V 10U	1	
C7311		ECEA1HKR47	E.CAPACITOR 50V 0.47U	1	
C7312		ECQV1H224JM	P.CAPACITOR 50V 0.22U	1	
C7313		ECQV1H104JM	P.CAPACITOR 50V 0.1U	1	
C7314		ECQV1H224JM	P.CAPACITOR 50V 0.22U	1	
C7315		ECQV1H104JM	P.CAPACITOR 50V 0.1U	1	
C7316		ECQV1H224JM	P.CAPACITOR 50V 0.22U	1	
C7317		ECEA1CK101	E.CAPACITOR 16V 100U	1	
C7318		ECUX1H103ZFV	C.CAPACITOR CH 50V 0.01U	1	
C7319		ECEA1CK470	E.CAPACITOR 16V 47U	1	
C7320,21		ECEA1CK100	E.CAPACITOR 16V 10U	2	
C7323,24		ECQV1H393JZ	P.CAPACITOR 50V 0.039U	2	
C7331		ECQV1H474JM	P.CAPACITOR 50V 0.47U	1	
C7332,33		ECUX1H102KBV	C.CAPACITOR CH 50V 1000P	2	
C7334		ECUX1H103ZFV	C.CAPACITOR CH 50V 0.01U	1	
C7335		ECEA1CK470	E.CAPACITOR 16V 47U	1	
C7336		ECUX1H103ZFV	C.CAPACITOR CH 50V 0.01U	1	
C7337		ECUX1H680JCV	C.CAPACITOR CH 50V 68P	1	
C7339		ECUX1H103ZFV	C.CAPACITOR CH 50V 0.01U	1	
C7340		ECUM1H390JFN	C.CAPACITOR CH 50V 39P	1	
C7341		ECUX1H070DCV	C.CAPACITOR CH 50V 7P	1	
C7343		ECEA1CK100	E.CAPACITOR 16V 10U	1	
C7345		ECUX1H103ZFV	C.CAPACITOR CH 50V 0.01U	1	
C7346		ECUM1H390JFN	C.CAPACITOR CH 50V 39P	1	
C7347		ECUX1H070DCV	C.CAPACITOR CH 50V 7P	1	
C7348		ECQV1H393JZ	P.CAPACITOR 50V 0.039U	1	
C7349,50		ECUX1H221JCV	C.CAPACITOR CH 50V 220P	2	
C7351,52		ECUX1H103ZFV	C.CAPACITOR CH 50V 0.01U	2	
C7353		ECEA1CK470	E.CAPACITOR 16V 47U	1	
C7354		ECEA1CK220	E.CAPACITOR 16V 22U	1	
C7355		ECEA1CK100	E.CAPACITOR 16V 10U	1	
C7356		ECEA1CKN100	E.CAPACITOR 16V 10U	1	
C7357		ECEA1CK100	E.CAPACITOR 16V 10U	1	
C7661		ECUM1H104KBM	C.CAPACITOR CH 50V 0.1U	1	
C7662		ECUM1H683KBM	C.CAPACITOR CH 50V 0.068U	1	
C7663		ECUM1H823KBM	C.CAPACITOR CH 50V 0.082U	1	
C7664		ECUM1H273KBM	C.CAPACITOR CH 50V 0.027U	1	
C7665,66		ECUX1H103ZFV	C.CAPACITOR CH 50V 0.01U	2	
C7667		ECEA1HKA100	E.CAPACITOR 50V 10U	1	
C7670,71		ECUX1H103ZFV	C.CAPACITOR CH 50V 0.01U	2	
C7673		ECUX1H103ZFV	C.CAPACITOR CH 50V 0.01U	1	
C7675		ECEA1HKN010	E.CAPACITOR 50V 1U	1	
C7676,77		ECUX1H103ZFV	C.CAPACITOR CH 50V 0.01U	2	
C7679		ECEA1HKN010	E.CAPACITOR 50V 1U	1	
C7681		ECEA1CK220	E.CAPACITOR 16V 22U	1	
C8001		ECUM1C474ZFN	C.CAPACITOR 16V 0.47U	1	
C8002-04		ECUM1H103ZFN	C.CAPACITOR CH 50V 0.01U	3	
C8006		ECUM1H103ZFN	C.CAPACITOR CH 50V 0.01U	1	
C8007		ECEA1AKS330	E.CAPACITOR 10V 33U	1	
C8008		ECUM1H220JCN	C.CAPACITOR CH 50V 22P	1	
C8009		ECUM1H103ZFN	C.CAPACITOR CH 50V 0.01U	1	
C8010-12		ECEA1AKS330	E.CAPACITOR 10V 33U	3	
C8013		ECUM1H103ZFN	C.CAPACITOR CH 50V 0.01U	1	
C8014		ECUM1H561KBN	C.CAPACITOR CH 50V 560P	1	
C8015		ECUM1H221JCN	C.CAPACITOR CH 50V 220P	1	
C8019		ECUM1H680JCN	C.CAPACITOR CH 50V 68P	1	
C8020		ECUM1H470JCN	C.CAPACITOR CH 50V 47P	1	
D302		1SS283	DIODE	1	
D303		MA151A	DIODE	1	
D304		1SS254	DIODE	1	
D701-07		MA77	DIODE	7	
D708		MA3100L	DIODE	1	
D709		MA77	DIODE	1	
D771		MA141WK	DIODE	1	
D772,73		MA141K	DIODE	2	
D801,02		1SS254	DIODE	2	

Ref.No.		Part No.	Part Name & Description	Pcs	Remarks
D804		1SS254	DIODE	1	
D2001		1SS254	DIODE	1	
D2002		MA153	DIODE	1	
D2003,04		1SS254	DIODE	2	
D2007,08		1SS254	DIODE	2	
D2009		MA151WK	DIODE	1	
D2010		MA151K	DIODE	1	
D3001		MA151K	DIODE	1	
D3002,03		1SS254	DIODE	2	
D4001		MA151K	DIODE	1	
D4003		MA151WK	DIODE	1	
D4004		MA723VT	DIODE	1	
D4005		MA151K	DIODE	1	
D4501-04		MA141K	DIODE	4	
D6001		1SS254	DIODE	1	
D6002		MA151K	DIODE	1	
D6003		1SS254	DIODE	1	
D6005,06		1SS254	DIODE	2	
D6007		MA4075-L	DIODE	1	
D7002		MA723VT	DIODE	1	
D7003		1SS254	DIODE	1	
D7004-06		11ES1	DIODE	3	
D7007		1SS254	DIODE	1	
D7304		MA3100L	DIODE	1	
D7601		MA141K	DIODE	1	
D7602		MA3082M	DIODE	1	
DL801		VLD0198	DELAY LINE	1	
FE		VJS1141	CONNECTOR (FEMALE)	1	
FL8001		ELB4N055	FILTER	1	
FL8002		ELB4L149	FILTER	1	
IC301		VEFH29D	IC	1	
IC701		LA7577	IC	1	
IC702		LA7975	IC	1	
IC801		NJM2233BMA	IC	1	
IC802		M52352FP	IC	1	
IC2001		XRA6887-V3	IC	1	
IC2002		BA6871	IC	1	
IC2004		LM358PS	IC	1	
IC3001		NJM2233BL	IC	1	
IC3002		BA7004	IC	1	
IC4501		XLH7773KS	IC	1	
IC4601		BA7755AF	IC	1	
IC6001		MN67434VRSR	IC	1	
IC7301		TDA3803A	IC	1	
IC7302		TA8721SN	IC	1	
IC7303		TC4W66F	IC	1	
IC7652		AN5043SC	IC	1	
IC8001		BA7049FS	IC	1	
J3901,02		VJJ0348	JACK	2	
L303		ELESQ220KA	COIL 22UH	1	
L304		ELESQ101KA	COIL 100UH	1	
L305		ELESQ121JA	COIL	1	
L306		ELESQ390KA	COIL 39UH	1	
L701		ELESQ680KA	COIL 68UH	1	
L711		ELJNAR39KF	COIL	1	
L712-16		ELJFA151KB	COIL 150UH	5	
L718		ELJNA1R0JF	COIL H	1	
L719		ELESQ5R6KA	COIL 5.6UH	1	
L721		ELJFA151KB	COIL 150UH	1	
L723		ELJFA151KB	COIL 150UH	1	
L724		ELJNAR27KF	COIL	1	
L751		ELJFA100KB	COIL	1	
L752		ELESQ270KA	COIL 27UH	1	

Ref.No.		Part No.	Part Name & Description	Pcs	Remarks
L770		ELESQ680KA	COIL 68UH	1	
L803		ELESQ5R6KA	COIL 5.6UH	1	
L804		ELESQ101KA	COIL 100UH	1	
L805		ELESQ270KA	COIL 27UH	1	
L807,08		VLQ0540J150	COIL 15UH	2	
L809		ELESQ101KA	COIL 100UH	1	
L811,12		ELESQ101KA	COIL 100UH	2	
L2001		VLP0074	COIL	1	
L2002		ELESE102KA	COIL 1000UH	1	
L2003,04		VLQ0599J680	COIL	2	
L2005		VLP0083	COIL	1	
L2006		VLQ0599J680	COIL	1	
L3001		VLQ0599J680	COIL	1	
L3002		VLQ0599J151	COIL 150UH	1	
L3003		VLQ0599J820	COIL H	1	
L3005		VLQ0599J680	COIL	1	
L3006		VLQ0599J101	COIL 100UH	1	
L3007,08		VLQ0599J680	COIL	2	
L3009		VLQ0599J120	COIL H	1	
L3010		VLQ0599J6R8	COIL H	1	
L3011		VLQ0599J680	COIL	1	
L3012		VLQ0599J270	COIL 27UH	1	
L3013		VLQ0599J680	COIL	1	
L4001,02		ERJ6GMZ0R00	M.RESISTOR 1/10W 0	2	
L4501,02		ELESE101KA	COIL 100UH	2	
L4601		VLQEL07F153J	COIL 15MH	1	
L6001		VLP0074	COIL	1	
L6005		VLQ0599J331	COIL H	1	
L7003		VLQ0599J1R0	COIL 1UH	1	
L7004		VLQ0599J680	COIL	1	
L7005		VLQ0599J1R0	COIL 1UH	1	
L7006		VLQ0599J680	COIL	1	
L7008		VLQ0599J1R0	COIL 1UH	1	
L7301		ELESQ102KA	COIL 1000UH	1	
L8002		ELESQ101KA	COIL 100UH	1	
L8003		ELESQ221KA	COIL 220UH	1	
L8004		VLQ0188J470	COIL 47UH	1	
P1001		VJS3537A010G	CONNECTOR (FEMALE) 10P	1	
P2001		VJP1232T	CONNECTOR (MALE) 5P	1	
P2001		VJS1738T	CONNECTOR (FEMALE)	1	
P2002		VJS3537A015G	CONNECTOR (FEMALE) 15P	1	
P2003		VJP3502	CONNECTOR (MALE)	1	
P2503		VJS3482	CONNECTOR (FEMALE)	1	
P2902		VJS1738T	CONNECTOR (FEMALE)	1	
P3001		VJS3537A020G	CONNECTOR (FEMALE) 20P	1	
P4001		VJS2331	CONNECTOR (FEMALE)	1	
P4002		VJP1230T	CONNECTOR (MALE) 3P	1	
P4002		VJS1230T	CONNECTOR (FEMALE)	1	
P6001		VJS3537A025G	CONNECTOR (FEMALE) 25P	1	
P6002		VJS3537A012G	CONNECTOR (FEMALE) 12P	1	
P6003		VJP1242T	CONNECTOR (MALE) 2P	1	
P6004		VJS3537A013G	CONNECTOR (FEMALE) 13P	1	
P7301		VJP1237R	CONNECTOR (MALE) 10P	1	
P7301		VJS1237R	CONNECTOR (FEMALE)	1	
P7302		VJP1237T	CONNECTOR (MALE) 10P	1	
P7302		VJS1237T	CONNECTOR (FEMALE)	1	
P7901		VJS1237R	CONNECTOR (FEMALE)	1	
P7902		VJS1237T	CONNECTOR (FEMALE)	1	
PK4001-03		VJR0757B018T	CONNECTOR	3	
PK7301,02		VJP3042A010W	CONNECTOR (MALE) 10P	2	
PP801		VJP3043A005W	CONNECTOR (MALE) 5P	1	
PP802		VJP3043A003W	CONNECTOR (MALE) 3P	1	
PP803		VJP3043A007W	CONNECTOR (MALE) 7P	1	
PP3001		VJP3044G009W	CONNECTOR (MALE) 9P	1	
PP3002		VJP3044G012W	CONNECTOR (MALE) 12P	1	
PP3003		VJP3044G006W	CONNECTOR (MALE) 6P	1	
PP7001		VJP3043A007W	CONNECTOR (MALE) 7P	1	
PP7002-04		VJP3043A005W	CONNECTOR (MALE) 5P	3	
PP7005		VJP3043A006W	CONNECTOR (MALE) 6P	1	

Ref.No.		Part No.	Part Name & Description	Pcs	Remarks
PS301		VJS3044F009W	CONNECTOR (FEMALE) 9P	1	
PS302		VJS3044F012W	CONNECTOR (FEMALE) 12P	1	
PS303		VJS3044F006W	CONNECTOR (FEMALE) 6P	1	
PS701-03		VJS3043B005W	CONNECTOR (FEMALE) 5P	3	
PS704		VJS3043B007W	CONNECTOR (FEMALE) 7P	1	
PS801		VJS3043B005W	CONNECTOR (FEMALE) 5P	1	
PS802		VJS3043B003W	CONNECTOR (FEMALE) 3P	1	
PS803		VJS3043B007W	CONNECTOR (FEMALE) 7P	1	
PS7301,02		VJS3042B010W	CONNECTOR (FEMALE) 10P	2	
Q703		MSD601-S	TRANSISTOR	1	
Q712		2SD1996-R	TRANSISTOR	1	
Q713		2SD1979-S	TRANSISTOR	1	
Q714		2SB1218-R	TRANSISTOR	1	
Q715		2SD1820	TRANSISTOR	1	
Q716		2SC3931-C	TRANSISTOR	1	
Q717		2SC2377	TRANSISTOR	1	
Q771		MSD601-S	TRANSISTOR	1	
Q1001		MSD1328	TRANSISTOR	1	
Q3001,02		MSD601-R	TRANSISTOR	2	
Q3003		MSB709-R	TRANSISTOR	1	
Q3004,05		MSD601-R	TRANSISTOR	2	
Q3006		MSC2295	TRANSISTOR	1	
Q3007		MSB709-R	TRANSISTOR	1	
Q3008		MSC2295	TRANSISTOR	1	
Q3010		2SB709	TRANSISTOR	1	
Q4002		2SD602A-R	TRANSISTOR	1	
Q4003		MSD601	TRANSISTOR	1	
Q4501		2SD655	TRANSISTOR	1	
Q4551		2SB561	TRANSISTOR	1	
Q4552		2SD1819A	TRANSISTOR	1	
Q4601		2SD1819A	TRANSISTOR	1	
Q6001		2SD1991A	TRANSISTOR	1	
Q6002		MSB709-R	TRANSISTOR	1	
Q6004,05		2SB1321-R	TRANSISTOR	2	
Q7301		2SD1820-S	TRANSISTOR	1	
Q7304		2SD1820	TRANSISTOR	1	
Q7305		MSD601	TRANSISTOR	1	
Q7306		2SC2404-C	TRANSISTOR	1	
QR303		MRN2404	TRANSISTOR-RESISTOR	1	
QR306		MRN1404	TRANSISTOR-RESISTOR	1	
QR701-03		UN5213	TRANSISTOR-RESISTOR	3	
QR704,05		XN4212	TRANSISTOR-TRANSISTOR	2	
QR706		DTC363EK	TRANSISTOR-RESISTOR	1	
QR707-09		XN4213	TRANSISTOR-RESISTOR	3	
QR711,12		UN5213	TRANSISTOR-RESISTOR	2	
QR715		UN5213	TRANSISTOR-RESISTOR	1	
QR717		UN5213	TRANSISTOR-RESISTOR	1	
QR804		MRN2404	TRANSISTOR-RESISTOR	1	
QR805,06		MRN1404	TRANSISTOR-RESISTOR	2	
QR2001		UN2113T	TRANSISTOR-RESISTOR	1	
QR2002		UN2114	TRANSISTOR-RESISTOR	1	
QR2003		XN1213	TRANSISTOR-TRANSISTOR	1	
QR2004		UN2112T	TRANSISTOR-RESISTOR	1	
QR3001		UN2111T	TRANSISTOR-RESISTOR	1	
QR3002,03		DTC363EK	TRANSISTOR-RESISTOR	2	
QR3005		UN2212T	TRANSISTOR-RESISTOR	1	
QR4001,02		UN2213T	TRANSISTOR-RESISTOR	2	
QR4508,09		UN5113	TRANSISTOR-RESISTOR	2	
QR4510		UN5212	TRANSISTOR-RESISTOR	1	
QR4602		UN5111	TRANSISTOR-RESISTOR	1	
QR4603		UN5213	TRANSISTOR-RESISTOR	1	
QR6001		XN1211	TRANSISTOR-RESISTOR	1	
QR6003		UN2211T	TRANSISTOR-RESISTOR	1	
QR6004		UN2212T	TRANSISTOR-RESISTOR	1	
QR7301,02		UN5213	TRANSISTOR-RESISTOR	2	
QR7312-14		UN5211	TRANSISTOR-RESISTOR	3	
QR7315,16		UN5213	TRANSISTOR-RESISTOR	2	
QR7317		XN4213	TRANSISTOR-RESISTOR	1	
QR7601		UN5213	TRANSISTOR-RESISTOR	1	

Ref.No.		Part No.	Part Name & Description	Pcs	Remarks
R304		ERJ6GMZOR00	M.RESISTOR 1/10W 0	1	
R307		ERJ6GEYJ472	M.RESISTOR CH 1/10W 4.7K	1	
R308		ERJ6GMYJ472	M.RESISTOR CH 1/10W 4.7K	1	
R310		ERJ6GMYJ272	M.RESISTOR CH 1/10W 2.7K	1	
R312		ERJ6GMYJ473	M.RESISTOR CH 1/10W 47K	1	
R315		ERJ6GMYJ393	M.RESISTOR CH 1/10W 39K	1	
R316		ERJ6GMYJ392	M.RESISTOR CH 1/10W 3.9K	1	
R318,19		ERJ6GMYJ103	M.RESISTOR CH 1/10W 10K	2	
R322		ERJ6GMYJ332	M.RESISTOR CH 1/10W 3.3K	1	
R327		ERJ6GEYK125	M.RESISTOR CH 1/10W 1.2M	1	
R701		ERJ3GEYJ682	M.RESISTOR CH 1/16W 6.8K	1	
R702		ERJ3GEYJ222	M.RESISTOR CH 1/16W 2.2K	1	
R703		ERJ3GEYJ183	M.RESISTOR CH 1/16W 18K	1	
R704		ERJ3GEYJ152	M.RESISTOR CH 1/16W 1.5K	1	
R705		ERJ3GEYJ222	M.RESISTOR CH 1/16W 2.2K	1	
R706		ERJ3GEYJ103	M.RESISTOR CH 1/16W 10K	1	
R707		ERJ3GEYJ272	M.RESISTOR CH 1/16W 2.7K	1	
R709		ERJ3GEYJ183	M.RESISTOR CH 1/16W 18K	1	
R710		ERJ3GEYJ122	M.RESISTOR CH 1/16W 1.2K	1	
R712		ERJ3GEYJ105	M.RESISTOR CH 1/16W 1M	1	
R713		ERJ3GEYJ184	M.RESISTOR CH 1/16W 180K	1	
R714		ERJ3GEYJ154	M.RESISTOR CH 1/16W 150K	1	
R715		ERJ3GEYJ101	M.RESISTOR CH 1/16W 100	1	
R716		ERJ6GEYJ102	M.RESISTOR CH 1/10W 1K	1	
R717		ERJ3GEYJ121	M.RESISTOR CH 1/16W 120	1	
R718		ERJ3GEYJ470	M.RESISTOR CH 1/16W 47	1	
R720		ERJ3GEYJ102	M.RESISTOR CH 1/16W 1K	1	
R721-23		ERJ3GEYJ103	M.RESISTOR CH 1/16W 10K	3	
R724		VRE0040E471	M.RESISTOR CH 1/10W 470	1	
R725		ERJ3GEYJ271	M.RESISTOR CH 1/16W 270	1	
R726		ERJ6GEYJ102	M.RESISTOR CH 1/10W 1K	1	
R727		ERJ3GEYJ101	M.RESISTOR CH 1/16W 100	1	
R728		ERJ3GEYJ152	M.RESISTOR CH 1/16W 1.5K	1	
R729-32		ERJ3GEYJ223	M.RESISTOR CH 1/16W 22K	4	
R733		ERJ3GEYJ103	M.RESISTOR CH 1/16W 10K	1	
R734		ERJ3GEYJ562	M.RESISTOR CH 1/16W 5.6K	1	
R735		ERJ3GEYJ223	M.RESISTOR CH 1/16W 22K	1	
R736		ERJ3GEYJ103	M.RESISTOR CH 1/16W 10K	1	
R737		ERJ3GEYJ223	M.RESISTOR CH 1/16W 22K	1	
R738		ERJ3GEYJ103	M.RESISTOR CH 1/16W 10K	1	
R740		VRE0040E151	M.RESISTOR CH 1/10W 150	1	
R751,52		ERJ3GEYJ103	M.RESISTOR CH 1/16W 10K	2	
R753		ERJ3GEYJ223	M.RESISTOR CH 1/16W 22K	1	
R756		ERJ3GEYJ103	M.RESISTOR CH 1/16W 10K	1	
R758		ERJ3GEYJ102	M.RESISTOR CH 1/16W 1K	1	
R759		ERJ3GEYJ222	M.RESISTOR CH 1/16W 2.2K	1	
R760		ERJ3GEYJ562	M.RESISTOR CH 1/16W 5.6K	1	
R761		ERJ3GEYJ472	M.RESISTOR CH 1/16W 4.7K	1	
R763,64		ERJ3GEYJ272	M.RESISTOR CH 1/16W 2.7K	2	
R765		ERJ3GEYJ682	M.RESISTOR CH 1/16W 6.8K	1	
R766		ERJ3GEYJ152	M.RESISTOR CH 1/16W 1.5K	1	
R767		ERJ3GEYJ332	M.RESISTOR CH 1/16W 3.3K	1	
R768		ERJ3GEYJ122	M.RESISTOR CH 1/16W 1.2K	1	
R769		ERJ3GEYJ681	M.RESISTOR CH 1/16W 680	1	
R770,71		ERJ3GEYJ223	M.RESISTOR CH 1/16W 22K	2	
R772		ERJ3GEYJ103	M.RESISTOR CH 1/16W 10K	1	
R773		ERJ3GEYJ472	M.RESISTOR CH 1/16W 4.7K	1	
R774		ERJ3GEYJ562	M.RESISTOR CH 1/16W 5.6K	1	
R775		ERJ3GEYJ101	M.RESISTOR CH 1/16W 100	1	
R776		ERJ3GEYJ472	M.RESISTOR CH 1/16W 4.7K	1	
R777		ERJ6GEYJ821	M.RESISTOR CH 1/10W 820	1	
R778		ERJ6GEYJ122	M.RESISTOR CH 1/10W 1.2K	1	
R779		ERJ3GEYJ181	M.RESISTOR CH 1/16W 180	1	
R792		ERJ3GEYJ120	M.RESISTOR CH 1/16W 12	1	
R793		ERJ3GEYJ102	M.RESISTOR CH 1/16W 1K	1	
R794		ERJ6GEYJ392	M.RESISTOR CH 1/10W 3.9K	1	
R813		ERJ6GMYJ102	M.RESISTOR CH 1/10W 1K	1	
R814		ERJ6GMYJ393	M.RESISTOR CH 1/10W 39K	1	
R815		ERJ6GMYJ821	M.RESISTOR CH 1/10W 820	1	
R816		ERJ6GMYJ471	M.RESISTOR CH 1/10W 470	1	
R817		ERJ6GMYJ182	M.RESISTOR CH 1/10W 1.8K	1	
R818		ERJ6GMYJ681	M.RESISTOR CH 1/10W 680	1	
R819		ERJ6GMYJ272	M.RESISTOR CH 1/10W 2.7K	1	

Ref.No.		Part No.	Part Name & Description	Pcs	Remarks
R820,21		ERJ6GMYJ122	M.RESISTOR CH 1/10W 1.2K	2	
R822		ERJ6GMYJ103	M.RESISTOR CH 1/10W 10K	1	
R823,24		ERJ6GMYJ152	M.RESISTOR CH 1/10W 1.5K	2	
R827		ERJ6GMYJ122	M.RESISTOR CH 1/10W 1.2K	1	
R828		ERJ6GMYJ271	M.RESISTOR CH 1/10W 270	1	
R829		ERJ6GMYJ122	M.RESISTOR CH 1/10W 1.2K	1	
R830		ERJ6GMYJ271	M.RESISTOR CH 1/10W 270	1	
R831		ERJ6GMYJ681	M.RESISTOR CH 1/10W 680	1	
R832		ERJ6GMYJ154	M.RESISTOR CH 1/10W 150K	1	
R833		ERJ6GMYJ204	M.RESISTOR CH 1/10W 200K	1	
R834		ERJ6GMYJ153	M.RESISTOR CH 1/10W 15K	1	
R835		ERJ6GMYJ103	M.RESISTOR CH 1/10W 10K	1	
R836		ERJ6GMYJ154	M.RESISTOR CH 1/10W 150K	1	
R848		ERJ6GMYJ222	M.RESISTOR CH 1/10W 2.2K	1	
R849		ERJ6GMYJ473	M.RESISTOR CH 1/10W 47K	1	
R850		ERJ6GMYJ563	M.RESISTOR CH 1/10W 56K	1	
R853		ERJ6GMYJ473	M.RESISTOR CH 1/10W 47K	1	
R855		ERJ6GMYJ152	M.RESISTOR CH 1/10W 1.5K	1	
R857		ERJ6GMYJ101	M.RESISTOR CH 1/10W 100	1	
R858		ERJ6GMYJ561	M.RESISTOR CH 1/10W 560	1	
R859		ERJ6GMYJ102	M.RESISTOR CH 1/10W 1K	1	
R1001		ERJ6GMYJ102	M.RESISTOR CH 1/10W 1K	1	
R2001		ERJ6GMYG512	M.RESISTOR CH 1/10W 5.1K	1	
R2002		ERJ6GMYG913	M.RESISTOR CH 1/10W 91K	1	
R2003		ERX1SJ1R8	M.RESISTOR 1W 1.8	1	
R2004-06		ERJ6GMYJ102	M.RESISTOR CH 1/10W 1K	3	
R2007,08		ERJ6GMYJ392	M.RESISTOR CH 1/10W 3.9K	2	
R2009		ERX12SJR47	M.RESISTOR 1/12W 0.47U	1	
R2010		ERDS2TJ560	C.RESISTOR 1/4W 56	1	
R2011,12		ERJ6GMYJ105	M.RESISTOR CH 1/10W 1M	2	
R2013		ERDS2TJ681	C.RESISTOR 1/4W 680	1	
R2014		ERJ6GMYG821	M.RESISTOR CH 1/10W 820	1	
R2015,16		ERDS2TJ560	C.RESISTOR 1/4W 56	2	
R2017		ERDS1TJ561	C.RESISTOR 1/2W 560	1	
R2018		ERJ6GMYJ222	M.RESISTOR CH 1/10W 2.2K	1	
R2019		ERJ6GMYG432	M.RESISTOR CH 1/10W 4.3K	1	
R2020		ERJ6GMYG473	M.RESISTOR CH 1/10W 47K	1	
R2021		ERJ6GMYJ104	M.RESISTOR CH 1/10W 100K	1	
R2022		ERJ6GMYJ683	M.RESISTOR CH 1/10W 68K	1	
R2023		ERJ6GMYJ333	M.RESISTOR CH 1/10W 33K	1	
R2024		ERJ6GMYJ563	M.RESISTOR CH 1/10W 56K	1	
R2025		ERJ6GMYJ682	M.RESISTOR CH 1/10W 6.8K	1	
R2026		ERJ6GMYJ684	M.RESISTOR CH 1/10W 680K	1	
R2027,28		ERJ6GMYJ223	M.RESISTOR CH 1/10W 22K	2	
R2029		ERJ6GMYJ272	M.RESISTOR CH 1/10W 2.7K	1	
R2031		ERJ6GMYJ244	M.RESISTOR CH 1/10W 220K	1	
R2032		ERJ6GMYG103	M.RESISTOR CH 1/10W 10K	1	
R2033		ERJ6GMYG133	M.RESISTOR CH 1/10W 13K	1	
R2034		ERJ6GMYJ102	M.RESISTOR CH 1/10W 1K	1	
R2035		ERJ6GMYJ105	M.RESISTOR CH 1/10W 1M	1	
R2036,37		ERJ6GMYJ472	M.RESISTOR CH 1/10W 4.7K	2	
R2038		ERJ6GMYJ683	M.RESISTOR CH 1/10W 68K	1	
R2039		ERJ6GMYJ472	M.RESISTOR CH 1/10W 4.7K	1	
R2040		ERJ6GMYJ332	M.RESISTOR CH 1/10W 3.3K	1	
R2041		ERJ6GMYJ221	M.RESISTOR CH 1/10W 220	1	
R2042,43		ERJ6GMYJ223	M.RESISTOR CH 1/10W 22K	2	
R2044		ERJ6GMYJ102	M.RESISTOR CH 1/10W 1K	1	
R2045		ERJ6GMYJ104	M.RESISTOR CH 1/10W 100K	1	
R2046		ERJ6GMYG273	M.RESISTOR CH 1/10W 27K	1	
R2047		ERJ6GMYJ104	M.RESISTOR CH 1/10W 100K	1	
R2048		ERJ6GMYG124	M.RESISTOR CH 1/10W 120K	1	
R2050		ERJ6GMYJ683	M.RESISTOR CH 1/10W 68K	1	
R2051		ERJ6GMYJ392	M.RESISTOR CH 1/10W 3.9K	1	
R2053,54		ERJ6GMYJ222	M.RESISTOR CH 1/10W 2.2K	2	
R2055		ERJ6GMYJ471	M.RESISTOR CH 1/10W 470	1	
R2056,57		ERJ6GMYJ822	M.RESISTOR CH 1/10W 8.2K	2	
R2060		ERDS2TJ332	C.RESISTOR 1/4W 3.3K	1	
R3001		ERJ6GMYJ102	M.RESISTOR CH 1/10W 1K	1	
R3002		ERJ6GMYJ222	M.RESISTOR CH 1/10W 2.2K	1	
R3003		ERJ6GMYJ103	M.RESISTOR CH 1/10W 10K	1	
R3004		ERJ6GMYJ272	M.RESISTOR CH 1/10W 2.7K	1	
R3005		ERJ6GMYJ332	M.RESISTOR CH 1/10W 3.3K	1	
R3006		ERDS2TJ471	C.RESISTOR 1/4W 470	1	
R3007		ERJ6GMYJ222	M.RESISTOR CH 1/10W 2.2K	1	
R3008		ERJ6GMYJ681	M.RESISTOR CH 1/10W 680	1	

Ref.No.		Part No.	Part Name & Description	Pcs	Remarks
R3009		ERJ6GMYJ222	M.RESISTOR CH 1/10W 2.2K	1	
R3010		ERJ6GMYJ102	M.RESISTOR CH 1/10W 1K	1	
R3011		ERJ6GMYJ561	M.RESISTOR CH 1/10W 560	1	
R3012,13		ERJ6GMYJ473	M.RESISTOR CH 1/10W 47K	2	
R3014		ERJ6GMYJ223	M.RESISTOR CH 1/10W 22K	1	
R3015,16		ERJ6GMYJ561	M.RESISTOR CH 1/10W 560	2	
R3017		ERJ6GMYJ391	M.RESISTOR CH 1/10W 390	1	
R3018		ERJ6GMYJ102	M.RESISTOR CH 1/10W 1K	1	
R3019,20		ERJ6GMYJ821	M.RESISTOR CH 1/10W 820	2	
R3021		ERJ6GMYJ122	M.RESISTOR CH 1/10W 1.2K	1	
R3022		ERJ6GMYJ102	M.RESISTOR CH 1/10W 1K	1	
R3023		ERJ6GMYJ103	M.RESISTOR CH 1/10W 10K	1	
R3024		ERJ6GMYJ332	M.RESISTOR CH 1/10W 3.3K	1	
R3025		ERJ6GMYJ152	M.RESISTOR CH 1/10W 1.5K	1	
R3026,27		ERJ6GMYJ102	M.RESISTOR CH 1/10W 1K	2	
R3028		ERJ6GMYJ471	M.RESISTOR CH 1/10W 470	1	
R3029		ERDS2TJ103	C.RESISTOR 1/4W 10K	1	
R3030		ERJ6GMYJ103	M.RESISTOR CH 1/10W 10K	1	
R3031		ERJ6GMYJ152	M.RESISTOR CH 1/10W 1.5K	1	
R3032		ERJ6GMYJ561	M.RESISTOR CH 1/10W 560	1	
R3033		ERJ6GMYJ223	M.RESISTOR CH 1/10W 22K	1	
R3035,36		ERJ6GMYJ223	M.RESISTOR CH 1/10W 22K	2	
R3037		ERJ6GMYJ222	M.RESISTOR CH 1/10W 2.2K	1	
R3038		ERJ6GMYJ102	M.RESISTOR CH 1/10W 1K	1	
R3906		ERJ6GMYJ750	M.RESISTOR CH 1/10W 75	1	
R3907		ERJ6GMYJ102	M.RESISTOR CH 1/10W 1K	1	
R3909		ERDS2TJ393	C.RESISTOR 1/4W 39K	1	
R3912		ERDS2TJ393	C.RESISTOR 1/4W 39K	1	
R3913		ERJ6GMYJ391	M.RESISTOR CH 1/10W 390	1	
R3914		ERJ6GMYJ102	M.RESISTOR CH 1/10W 1K	1	
R3915		ERJ6GMYJ750	M.RESISTOR CH 1/10W 75	1	
R3917		ERJ6GMZ0R00	M.RESISTOR 1/10W 0	1	
R3919		ERJ6GMYJ391	M.RESISTOR CH 1/10W 390	1	
R3920		ERJ6GMZ0R00	M.RESISTOR 1/10W 0	1	
R4001		ERJ6GMYJ332	M.RESISTOR CH 1/10W 3.3K	1	
R4002		ERJ6GMYJ223	M.RESISTOR CH 1/10W 22K	1	
R4003		ERJ6GMYJ392	M.RESISTOR CH 1/10W 3.9K	1	
R4004		ERJ6GMYJ183	M.RESISTOR CH 1/10W 18K	1	
R4005		ERJ6GMYJ823	M.RESISTOR CH 1/10W 82K	1	
R4006		ERJ6GMYJ273	M.RESISTOR CH 1/10W 27K	1	
R4007		ERJ6GMYJ683	M.RESISTOR CH 1/10W 68K	1	
R4008		ERJ6GMYJ823	M.RESISTOR CH 1/10W 82K	1	
R4009		ERJ6GMYJ100	M.RESISTOR CH 1/10W 10	1	
R4010,11		ERJ6GMYJ823	M.RESISTOR CH 1/10W 82K	2	
R4014		ERJ6GMYJ562	M.RESISTOR CH 1/10W 5.6K	1	
R4018		ERJ6GMYJ333	M.RESISTOR CH 1/10W 33K	1	
R4501,02		ERJ3GEY0R00	M.RESISTOR CH 1/16W 0	2	
R4503		VRE0071E36C	M.RESISTOR CH 1/10W	1	
R4506,07		ERJ3GEYJ473	M.RESISTOR CH 1/16W 47K	2	
R4508		ERJ3GEYG224	M.RESISTOR CH 1/16W 220K	1	
R4509		VRE0071E622	M.RESISTOR CH 1/10W	1	
R4511		ERJ3GEYG273	M.RESISTOR CH 1/16W 27K	1	
R4512		VRE0071E153	M.RESISTOR CH 1/10W	1	
R4513		ERJ3GEYG103	M.RESISTOR CH 1/16W 10K	1	
R4514		ERJ3GEYJ223	M.RESISTOR CH 1/16W 22K	1	
R4518,19		ERJ3GEY0R00	M.RESISTOR CH 1/16W 0	2	
R4522		ERJ3GEYJ225	M.RESISTOR CH 1/16W 2.2M	1	
R4527		VRE0071E333	M.RESISTOR CH 1/10W	1	
R4528		VRE0071E153	M.RESISTOR CH 1/10W	1	
R4529		ERJ3GEYG562	M.RESISTOR CH 1/16W 5.6K	1	
R4530		ERJ3GEYJ334	M.RESISTOR CH 1/16W 330K	1	
R4534		ERJ3GEYJ472	M.RESISTOR CH 1/16W 4.7K	1	
R4535		ERJ3GEYJ104	M.RESISTOR CH 1/16W 100K	1	
R4539		ERJ3GEYJ104	M.RESISTOR CH 1/16W 100K	1	
R4541		ERJ3GEYJ152	M.RESISTOR CH 1/16W 1.5K	1	
R4542		ERJ3GEYJ222	M.RESISTOR CH 1/16W 2.2K	1	
R4543		ERJ3GEYJ472	M.RESISTOR CH 1/16W 4.7K	1	
R4551,52		ERJ3GEYJ393	M.RESISTOR CH 1/16W 39K	2	
R4553,54		ERJ3GEYJ273	M.RESISTOR CH 1/16W 27K	2	
R4558		ERJ3GEYG224	M.RESISTOR CH 1/16W 220K	1	
R4561		ERJ3GEYG273	M.RESISTOR CH 1/16W 27K	1	
R4562		VRE0034E123	M.RESISTOR CH 1/10W 12K	1	
R4563		ERJ3GEYG272	M.RESISTOR CH 1/16W 2.7K	1	
R4568,69		ERJ3GEYJ273	M.RESISTOR CH 1/16W 27K	2	
R4572		ERJ3GEYJ473	M.RESISTOR CH 1/16W 47K	1	

Ref.No.		Part No.	Part Name & Description	Pcs	Remarks
R4573		ERJ3GEYJ152	M.RESISTOR CH 1/16W 1.5K	1	
R4577		ERJ3GEYJ473	M.RESISTOR CH 1/16W 47K	1	
R4578		VRE0071E473	M.RESISTOR CH 1/10W 47K	1	
R4581		ERJ3GEYJ104	M.RESISTOR CH 1/16W 100K	1	
R4583		ERJ3GEYJ102	M.RESISTOR CH 1/16W 1K	1	
R4584		ERJ3GEYJ152	M.RESISTOR CH 1/16W 1.5K	1	
R4585		ERJ3GEY0R00	M.RESISTOR CH 1/16W 0	1	
R4586		ERJ3GEYJ152	M.RESISTOR CH 1/16W 1.5K	1	
R4587,88		ERJ3GEYJ273	M.RESISTOR CH 1/16W 27K	2	
R4591		ERJ3GEYJ473	M.RESISTOR CH 1/16W 47K	1	
R4592		ERJ3GEYJ563	M.RESISTOR CH 1/16W 56K	1	
R4593		ERJ3GEYJ472	M.RESISTOR CH 1/16W 4.7K	1	
R4594		ERJ3GEYJ473	M.RESISTOR CH 1/16W 47K	1	
R4596		ERJ3GEYG473	M.RESISTOR CH 1/16W 47K	1	
R4597		ERJ3GEYJ103	M.RESISTOR CH 1/16W 10K	1	
R4598,99		ERJ3GEYG104	M.RESISTOR CH 1/16W 100K	2	
R4603		ERJ3GEYG183	M.RESISTOR CH 1/16W 18K	1	
R4606		VRE0071E562	M.RESISTOR	1	
R4610		ERJ3GEYJ473	M.RESISTOR CH 1/16W 47K	1	
R4611		ERJ3GEYJ101	M.RESISTOR CH 1/16W 100	1	
R4612		VRE0071E331	M.RESISTOR CH 1/10W	1	
R4613		ERJ3GEYG394	M.RESISTOR CH 1/16W 390K	1	
R4615		VRE0071E133	M.RESISTOR CH 1/10W	1	
R4616		ERJ3GEYJ105	M.RESISTOR CH 1/16W 1M	1	
R4649		ERJ3GEYJ470	M.RESISTOR CH 1/16W 47	1	
R4651		ERJ3GEYJ471	M.RESISTOR CH 1/16W 470	1	
R4653		ERJ3GEYJ821	M.RESISTOR CH 1/16W 820	1	
R4654		ERJ3GEYJ223	M.RESISTOR CH 1/16W 22K	1	
R4655		ERJ3GEYJ562	M.RESISTOR CH 1/16W 5.6K	1	
R4656		ERJ3GEYG243	M.RESISTOR CH 1/16W 24K	1	
R4657		ERJ3GEYJ392	M.RESISTOR CH 1/16W 3.9K	1	
R4666		ERJ3GEYJ471	M.RESISTOR CH 1/16W 470	1	
R4670		ERJ3GEYJ822	M.RESISTOR CH 1/16W 8.2K	1	
R4671		ERJ3GEY0R00	M.RESISTOR CH 1/16W 0	1	
R6001		ERJ6GMYJ103	M.RESISTOR CH 1/10W 10K	1	
R6002		ERJ6GMYG272	M.RESISTOR CH 1/10W 2.7K	1	
R6004		ERJ6GMYJ102	M.RESISTOR CH 1/10W 1K	1	
R6005-07		ERJ6GMYJ333	M.RESISTOR CH 1/10W 33K	3	
R6008		ERJ6GMYJ272	M.RESISTOR CH 1/10W 2.7K	1	
R6009-11		ERJ6GMYJ102	M.RESISTOR CH 1/10W 1K	3	
R6012		ERJ6GMYJ272	M.RESISTOR CH 1/10W 2.7K	1	
R6013		ER0S2CKG2000	M.RESISTOR 1/4W 200	1	
R6014,15		ERJ6GMYG223	M.RESISTOR CH 1/10W 22K	2	
R6016		ERJ6GMYJ103	M.RESISTOR CH 1/10W 10K	1	
R6017		ERJ6GMYJ271	M.RESISTOR CH 1/10W 270	1	
R6018		ERJ6GMYJ683	M.RESISTOR CH 1/10W 68K	1	
R6019		ERJ6GMYJ103	M.RESISTOR CH 1/10W 10K	1	
R6020		ERJ6GMYJ222	M.RESISTOR CH 1/10W 2.2K	1	
R6021		ERJ6GMYJ103	M.RESISTOR CH 1/10W 10K	1	
R6022		ERJ6GMYJ101	M.RESISTOR CH 1/10W 100	1	
R6023		ERJ6GMYJ104	M.RESISTOR CH 1/10W 100K	1	
R6024-29		ERJ6GMYJ102	M.RESISTOR CH 1/10W 1K	6	
R6030,31		ERJ6GMYJ103	M.RESISTOR CH 1/10W 10K	2	
R6032,33		ERJ6GMYJ272	M.RESISTOR CH 1/10W 2.7K	2	
R6034,35		ERJ6GMYJ221	M.RESISTOR CH 1/10W 220	2	
R6036		ERJ6GMYJ104	M.RESISTOR CH 1/10W 100K	1	
R6037		ERJ6GMYJ224	M.RESISTOR CH 1/10W 220K	1	
R6038		ERJ6GMYJ223	M.RESISTOR CH 1/10W 22K	1	
R6039		ERJ6GMYJ183	M.RESISTOR CH 1/10W 18K	1	
R6040		ERJ6GMYJ333	M.RESISTOR CH 1/10W 33K	1	
R6042		ERJ6GMYJ103	M.RESISTOR CH 1/10W 10K	1	
R6043		ERJ6GMYJ332	M.RESISTOR CH 1/10W 3.3K	1	
R6044		ERJ6GMYJ222	M.RESISTOR CH 1/10W 2.2K	1	
R6048		ERJ6GMYJ332	M.RESISTOR CH 1/10W 3.3K	1	
R6049		ERJ6GMYJ152	M.RESISTOR CH 1/10W 1.5K	1	
R6050		ERJ6GMYJ332	M.RESISTOR CH 1/10W 3.3K	1	
R6051		ERJ6GMYJ472	M.RESISTOR CH 1/10W 4.7K	1	
R7001,02		ERJ6GMYJ151	M.RESISTOR CH 1/10W 150	2	
R7004		ERJ6GMYJ472	M.RESISTOR CH 1/10W 4.7K	1	
R7302		ERJ3GEYJ392	M.RESISTOR CH 1/16W 3.9K	1	
R7303		ERJ3GEYJ182	M.RESISTOR CH 1/16W 1.8K	1	
R7304		ERJ3GEYJ392	M.RESISTOR CH 1/16W 3.9K	1	
R7305		ERJ3GEYJ822	M.RESISTOR CH 1/16W 8.2K	1	
R7306		ERJ3GEYJ471	M.RESISTOR CH 1/16W 470	1	
R7307		ERJ3GEYJ104	M.RESISTOR CH 1/16W 100K	1	

Ref.No.		Part No.	Part Name & Description	Pcs	Remarks
R7308		ERJ3GEYJ273	M.RESISTOR CH 1/16W 27K	1	
R7309		ERDS2TJ102	C.RESISTOR 1/4W 1K	1	
R7310		ERJ3GEYJ474	M.RESISTOR CH 1/16W 470K	1	
R7311		ERJ3GEYJ562	M.RESISTOR CH 1/16W 5.6K	1	
R7312		ERJ3GEYJ563	M.RESISTOR CH 1/16W 56K	1	
R7313		ERJ3GEYJ824	M.RESISTOR CH 1/16W 820K	1	
R7314,15		ERJ3GEYJ224	M.RESISTOR CH 1/16W 220K	2	
R7316		ERJ3GEYJ473	M.RESISTOR CH 1/16W 47K	1	
R7317		ERJ3GEYJ393	M.RESISTOR CH 1/16W 39K	1	
R7318		ERJ3GEYJ153	M.RESISTOR CH 1/16W 15K	1	
R7321		ERJ3GEYJ103	M.RESISTOR CH 1/16W 10K	1	
R7322		ERJ3GEYJ102	M.RESISTOR CH 1/16W 1K	1	
R7323		ERJ3GEYJ103	M.RESISTOR CH 1/16W 10K	1	
R7324,25		ERJ3GEYJ271	M.RESISTOR CH 1/16W 270	2	
R7329		ERJ3GEYJ102	M.RESISTOR CH 1/16W 1K	1	
R7330		ERJ3GEYJ332	M.RESISTOR CH 1/16W 3.3K	1	
R7334-37		ERJ3GEYJ471	M.RESISTOR CH 1/16W 470	4	
R7338		ERJ3GEYJ182	M.RESISTOR CH 1/16W 1.8K	1	
R7339		ERJ3GEYJ330	M.RESISTOR CH 1/16W 33	1	
R7340		ERJ3GEYJ152	M.RESISTOR CH 1/16W 1.5K	1	
R7341		ERJ3GEYJ681	M.RESISTOR CH 1/16W 680	1	
R7342		ERJ3GEYJ103	M.RESISTOR CH 1/16W 10K	1	
R7345		ERJ3GEYJ182	M.RESISTOR CH 1/16W 1.8K	1	
R7346		ERJ3GEYJ221	M.RESISTOR CH 1/16W 220	1	
R7347		ERJ3GEYJ681	M.RESISTOR CH 1/16W 680	1	
R7348		ERJ3GEYJ222	M.RESISTOR CH 1/16W 2.2K	1	
R7351-53		ERJ3GEYJ103	M.RESISTOR CH 1/16W 10K	3	
R7354,55		ERJ3GEYJ102	M.RESISTOR CH 1/16W 1K	2	
R7356-58		ERJ3GEYJ223	M.RESISTOR CH 1/16W 22K	3	
R7359		ERJ3GEYJ822	M.RESISTOR CH 1/16W 8.2K	1	
R7360-62		ERJ3GEYJ154	M.RESISTOR CH 1/16W 150K	3	
R7363		ERJ3GEYJ124	M.RESISTOR CH 1/16W 120K	1	
R7364		ERJ3GEYJ683	M.RESISTOR CH 1/16W 68K	1	
R7671,72		ERJ3GEYJ473	M.RESISTOR CH 1/16W 47K	2	
R7673		ERJ3GEYJ104	M.RESISTOR CH 1/16W 100K	1	
R7674		ERJ3GEYJ124	M.RESISTOR CH 1/16W 120K	1	
R7675		ERJ3GEYJ103	M.RESISTOR CH 1/16W 10K	1	
R7676		ERG1SJ152	M.RESISTOR 1W 1.5K	1	
R7677		ERJ3GEYJ103	M.RESISTOR CH 1/16W 10K	1	
R7678		ERJ3GEYJ223	M.RESISTOR CH 1/16W 22K	1	
R7679		VRE0040E100	M.RESISTOR CH 1/10W 10	1	
R7680		ERJ3GEYJ102	M.RESISTOR CH 1/16W 1K	1	
R7691		ERJ3GEYJ103	M.RESISTOR CH 1/16W 10K	1	
R7695		ERJ3GEYJ562	M.RESISTOR CH 1/16W 5.6K	1	
R7696		ERJ3GEYJ473	M.RESISTOR CH 1/16W 47K	1	
R8001		ERJ6GEYJ102	M.RESISTOR CH 1/10W 1K	1	
R8002,03		ERJ6GMYJ102	M.RESISTOR CH 1/10W 1K	2	
R8004		ERJ6GMYJ821	M.RESISTOR CH 1/10W 820	1	
R8005		ERJ6GMZ0R00	M.RESISTOR 1/10W 0	1	
R8007		ERJ6GMZ0R00	M.RESISTOR 1/10W 0	1	
R8008,09		ERJ6GMYJ102	M.RESISTOR CH 1/10W 1K	2	
R8010		ERJ6GEYG911	M.RESISTOR CH 1/10W 910	1	
R8011		ERJ6GMYJ102	M.RESISTOR CH 1/10W 1K	1	
R8014		ERJ6GMYJ471	M.RESISTOR CH 1/10W 470	1	
R8015		ERJ6GMYJ222	M.RESISTOR CH 1/10W 2.2K	1	
R8016		ERJ6GMYJ181	M.RESISTOR CH 1/10W 180	1	
SW3901		VSS0233	SWITCH	1	
T703		EIV5EC063A	TRANSFORMER	1	
T704		EIV5EC040A	TRANSFORMER	1	
T711		EIS5EC008A	TRANSFORMER	1	
T4001		EIQ7QF014Q	TRANSFORMER	1	
T7301		EIR7QG001B	TRANSFORMER	1	
T7302,03		EIL7QH012Q	TRANSFORMER	2	
T7304		EIS5EC007A	TRANSFORMER	1	
T7305		EIS5EC005A	TRANSFORMER	1	
TR		VJS3481	CONNECTOR (FEMALE)	1	
VR701		EVNCBAA00B23	V.RESISTOR	1	

Ref.No.		Part No.	Part Name & Description	Pcs	Remarks
VR751		EVNCBAA00B53	V.RESISTOR	1	
VR803		EVNCBAA00B14	V.RESISTOR	1	
VR2001		EVNDXAA00B54	V.RESISTOR 50K	1	
VR2006		EVNDXAA00B15	V.RESISTOR 100K	1	
VR2011		EVNDXAA00B15	V.RESISTOR 100K	1	
VR3001		EVNDXAA00B23	V.RESISTOR 5K	1	
VR3012,13		EVNDXAA00B52	V.RESISTOR 500	2	
VR4001		EVNDXAA00B25	V.RESISTOR 200K	1	
VR4501		EVMECSA00B53	V.RESISTOR	1	
VR4502		EVMEASA00BY4	V.RESISTOR	1	
VR4507		EVMEASA00BY4	V.RESISTOR	1	
VR4509		EVMECSA00BY3	V.RESISTOR	1	
VR4550		EVMECSA00BS3	V.RESISTOR	1	
VR4551,52		EVMEASA00B55	V.RESISTOR	2	
VR7301		EVTEASA00B14	V.RESISTOR	1	
VR7326		EVTEASA00B52	V.RESISTOR	1	
VR7328		EVTEASA00B52	V.RESISTOR	1	
VR7340		EVNCBAA00B14	V.RESISTOR	1	
VR7342		EVNCBAA00B14	V.RESISTOR	1	
VR7344		EVNCBAA00B14	V.RESISTOR	1	
VR8001		EVNDXAA00B23	V.RESISTOR 5K	1	
X710		EFCH38MWV3	CRYSTAL OSCILLATOR	1	
X711		EFCS3F02W3B	CRYSTAL OSCILLATOR	1	
X712		EFCS6R0MS5	CRYSTAL OSCILLATOR	1	
X714		VSX0553	CRYSTAL OSCILLATOR	1	
X715		VSX0547	CRYSTAL OSCILLATOR	1	
X716		EFCS4504BFB	CRYSTAL OSCILLATOR	1	
X717		EFCS5744BF	CRYSTAL OSCILLATOR	1	
X718		EFCH32MWP1	CRYSTAL OSCILLATOR	1	
X719		EFCS4504BFB	CRYSTAL OSCILLATOR	1	
X720		EFCS6004BF	CRYSTAL OSCILLATOR	1	
X801		VSX0162	CRYSTAL OSCILLATOR	1	
X3001		VSX0099	CRYSTAL OSCILLATOR	1	
X6001		VSX0609	CRYSTAL OSCILLATOR	1	
X7301,02		EFCS5R5MS5B	CRYSTAL OSCILLATOR	2	
X7303,04		EFCS5R74MS5B	CRYSTAL OSCILLATOR	2	
X7305		ELB5A016	CRYSTAL OSCILLATOR	1	
X8001		VSX0473	CRYSTAL OSCILLATOR	1	
			MISCELLANEOUS		
		ENC17992A	RF CONVERTER	1	<!>
		VJH0756	I/O JACK PLATE	1	
		VEE8474	WIRE CABLE	1	(P2001-P2902)
		VEE8564	WIRE CABLE	1	(P2003-POWER TR.)
		VEE8969	WIRE CABLE	1	(P4002-FE HEAD)
		VWJ25C9200BB	FLAT CARD CABLE	1	(P6001-P7501)
		VWJ12C9200BB	FLAT CARD CABLE	1	(P6002-P7502)
		VWJ0745	FLAT CARD CABLE	1	(P3001-P501)
		VWJ0746	FLAT CARD CABLE	1	(P6004-P1505)
		VWJ0825	FLAT CARD CABLE	1	(P2002-CAPSTAN)
		VWJ0826B	FLAT CARD CABLE	1	(P1001-P1102)
		VJF1031	CLAMPER	1	
		ENV59B1H3	TUNER	1	<!>FOR TV DEMODU.
		VSC4025	SHIELD COVER (MAIN)	1	FOR TV DEMODULATOR
		VSC3815	SHIELD COVER (TOP)	1	FOR TV DEMODULATOR
		VEE8559	WIRE CABLE	1	FOR DECORDER
					(P7901-P7301)
		VEE8560	WIRE CABLE	1	FOR DECORDER
					(P7902-P7302)
	■	VEP03A88H	MAIN C.B.A.		(RTL)NV-HD90EE
C305		ECUM1H470JCN	C.CAPACITOR CH 50V 47P	1	
C306,07		ECUM1H104ZFN	C.CAPACITOR CH 50V 0.1U	2	
C308		ECEA1EKN4R7	E.CAPACITOR 25V 4.7U	1	
C309		ECUM1H333KBN	C.CAPACITOR CH 50V 0.033U	1	
C310		ECEA1CK220	E.CAPACITOR 16V 22U	1	
C311		ECEA0JK101	E.CAPACITOR 6.3V 100U	1	
C312		ECUM1H104ZFN	C.CAPACITOR CH 50V 0.1U	1	

Ref.No.		Part No.	Part Name & Description	Pcs	Remarks
C313,14		ECUM1H103ZFN	C.CAPACITOR CH 50V 0.01U	2	
C315		ECUM1H560JCN	C.CAPACITOR CH 50V 56P	1	
C319		ECEA0JK101	E.CAPACITOR 6.3V 100U	1	
C320		ECUM1H820JCN	C.CAPACITOR CH 50V 82P	1	
C701		ECEA1EK4R7	E.CAPACITOR 25V 4.7U	1	
C702		ECEA1CK100	E.CAPACITOR 16V 10U	1	
C703		ECEA1HK3R3	E.CAPACITOR 50V 3.3U	1	
C705		ECEA1EK4R7	E.CAPACITOR 25V 4.7U	1	
C706		ECUM1H104ZFN	C.CAPACITOR CH 50V 0.1U	1	
C708		ECEA1CK330	E.CAPACITOR 16V 33U	1	
C709		ECEA1EK4R7	E.CAPACITOR 25V 4.7U	1	
C710		ECUM1H103ZFN	C.CAPACITOR CH 50V 0.01U	1	
C715-20		ECUM1H103ZFN	C.CAPACITOR CH 50V 0.01U	6	
C721		ECEA1HKR27K	E.CAPACITOR 50V 0.27U	1	
C722		ECUM1H103ZFN	C.CAPACITOR CH 50V 0.01U	1	
C723		ECUM1H120JCN	C.CAPACITOR CH 50V 12P	1	
C725		ECQV1H104JM	P.CAPACITOR 50V 0.1U	1	
C728		ECUM1H103ZFN	C.CAPACITOR CH 50V 0.01U	1	
C730		ECEA1CK100	E.CAPACITOR 16V 10U	1	
C731		ECEA1CKS100	E.CAPACITOR 16V 10U	1	
C734		ECUM1H103ZFN	C.CAPACITOR CH 50V 0.01U	1	
C739		ECEA1HK010	E.CAPACITOR 50V 1U	1	
C740		ECUM1H103ZFN	C.CAPACITOR CH 50V 0.01U	1	
C741		ECEA1CK100	E.CAPACITOR 16V 10U	1	
C742		ECUM1H030CCN	C.CAPACITOR CH 50V 3P	1	
C743		ECUM1H270JSN	C.CAPACITOR CH 50V 27P	1	
C744		ECEA1HKR47	E.CAPACITOR 50V 0.47U	1	
C745		ECUM1H680JPN	C.CAPACITOR CH 50V 68P	1	
C746		ECUM1H150JCN	C.CAPACITOR CH 50V 15P	1	
C748		ECEA1CK100	E.CAPACITOR 16V 10U	1	
C781		ECUM1H390JCN	C.CAPACITOR CH 50V 39P	1	
C782		ECUM1H330JCN	C.CAPACITOR CH 50V 33P	1	
C797-99		ECUM1H103ZFN	C.CAPACITOR CH 50V 0.01U	3	
C801		ECUM1H103ZFN	C.CAPACITOR CH 50V 0.01U	1	
C802		ECUM1H151JCN	C.CAPACITOR CH 50V 150P	1	
C803,04		ECUM1H103ZFN	C.CAPACITOR CH 50V 0.01U	2	
C805		ECEA0JK221	E.CAPACITOR 6.3V 220	1	
C806		ECUM1H104ZFN	C.CAPACITOR CH 50V 0.1U	1	
C807		ECUM1H181JCN	C.CAPACITOR CH 50V 180P	1	
C808		ECUM1H270JCN	C.CAPACITOR CH 50V 27P	1	
C809		ECUM1H103ZFN	C.CAPACITOR CH 50V 0.01U	1	
C812		ECUM1H103ZFN	C.CAPACITOR CH 50V 0.01U	1	
C814		ECUM1H103ZFN	C.CAPACITOR CH 50V 0.01U	1	
C815		ECUM1H560JCN	C.CAPACITOR CH 50V 56P	1	
C816		ECUM1H103ZFN	C.CAPACITOR CH 50V 0.01U	1	
C817		ECUM1H560JCN	C.CAPACITOR CH 50V 56P	1	
C818		ECUM1H103ZFN	C.CAPACITOR CH 50V 0.01U	1	
C819		ECUM1H470JCN	C.CAPACITOR CH 50V 47P	1	
C820-25		ECUM1H103ZFN	C.CAPACITOR CH 50V 0.01U	6	
C826		ECEA0JK101	E.CAPACITOR 6.3V 100U	1	
C827		ECUM1H103ZFN	C.CAPACITOR CH 50V 0.01U	1	
C828		ECUM1H470JCN	C.CAPACITOR CH 50V 47P	1	
C829		ECUM1H103ZFN	C.CAPACITOR CH 50V 0.01U	1	
C830		ECEA1HK0R1	E.CAPACITOR 50V 0.1U	1	
C831		ECQB1H332JH	P.CAPACITOR 50V 0.27U	1	
C832		ECUM1H331JCN	C.CAPACITOR CH 50V 330P	1	
C838		ECUM1H104ZFN	C.CAPACITOR CH 50V 0.1U	1	
C839		ECUM1H100DCN	C.CAPACITOR CH 50V 10P	1	
C841		ECUM1H102KBN	C.CAPACITOR CH 50V 1000P	1	
C842		ECEA0JK101	E.CAPACITOR 6.3V 100U	1	
C843		ECUM1H104ZFN	C.CAPACITOR CH 50V 0.1U	1	
C845		ECEA1HK010	E.CAPACITOR 50V 1U	1	
C846		ECUM1H103ZFN	C.CAPACITOR CH 50V 0.01U	1	
C849		ECUM1H103ZFN	C.CAPACITOR CH 50V 0.01U	1	
C881		ECUM1H103ZFN	C.CAPACITOR CH 50V 0.01U	1	
C882		ECEA1CK330	E.CAPACITOR 16V 33U	1	
C883		ECEA1AK470	E.CAPACITOR 10V 47U	1	
C884		ECQV1H563JM	P.CAPACITOR 50V 0.056U	1	
C885		ECEA1CK330	E.CAPACITOR 16V 33U	1	
C886		ECUM1H103ZFN	C.CAPACITOR CH 50V 0.01U	1	
C887		ECUM1C105ZFN	C.CAPACITOR CH 16V 1U	1	
C888		ECUM1H470JCN	C.CAPACITOR CH 50V 47P	1	
C1001		ECA1EM101	E.CAPACITOR 25V 100U	1	
C1002		ECEA1AFS221	E.CAPACITOR 10V 220U	1	
C1003		ECEA0JKA330	E.CAPACITOR 6.3V 33U	1	

Ref.No.		Part No.	Part Name & Description	Pcs	Remarks
C1004		ECEA1CKA330	E.CAPACITOR 16V 33U	1	
C1005		ECEA1CKA100	E.CAPACITOR 16V 10U	1	
C1006		ECUM1H103ZFN	C.CAPACITOR CH 50V 0.01U	1	
C2001		ECUM1H104ZFN	C.CAPACITOR CH 50V 0.1U	1	
C2002		ECUM1H103ZFN	C.CAPACITOR CH 50V 0.01U	1	
C2003		ECEA1CKA470	E.CAPACITOR 16V 47U	1	
C2004		ECEA1CKA101	E.CAPACITOR 16V 100U	1	
C2005,06		ECEA1HKNR47	E.CAPACITOR 50V 0.47U	2	
C2007		ECUM1H103ZFN	C.CAPACITOR CH 50V 0.01U	1	
C2008		ECEA1HKA2R2	E.CAPACITOR 50V 2.2U	1	
C2009,10		ECUM1H680JCN	C.CAPACITOR CH 50V 68P	2	
C2011,12		ECUM1H333KBN	C.CAPACITOR CH 50V 0.033U	2	
C2013		ECQV1H334JM	P.CAPACITOR 50V 0.33U	1	
C2014		ECUM1H333KBN	C.CAPACITOR CH 50V 0.033U	1	
C2015,16		ECEA1HKA2R2	E.CAPACITOR 50V 2.2U	2	
C2017		ECEA1HKAR22	E.CAPACITOR 50V 0.22U	1	
C2018,19		ECUM1H333KBN	C.CAPACITOR CH 50V 0.033U	2	
C2020		ECUM1H103ZFN	C.CAPACITOR CH 50V 0.01U	1	
C2021		ECA0JM221	E.CAPACITOR 6.3V 220U	1	
C2022		ECEA1CKA470	E.CAPACITOR 16V 47U	1	
C2023		ECUM1H104ZFN	C.CAPACITOR CH 50V 0.1U	1	
C2024		ECEA1CKA100	E.CAPACITOR 16V 10U	1	
C2025,26		ECUM1C105ZFN	C.CAPACITOR CH 16V 1U	2	
C2027		ECEA1HKA3R3	E.CAPACITOR 50V 3.3U	1	
C2028		ECEA1HKN3R3	E.CAPACITOR 50V 3.3U	1	
C2029		ECUM1H471JCN	C.CAPACITOR CH 50V 470P	1	
C2030		ECUM1H222KBN	C.CAPACITOR CH 50V 2200P	1	
C2031		ECUM1H392KBN	C.CAPACITOR CH 50V 3900P	1	
C2032		ECUM1H223KBN	C.CAPACITOR CH 50V 0.022U	1	
C2033		ECA0JM221	E.CAPACITOR 6.3V 220U	1	
C2034		ECEA1CKA100	E.CAPACITOR 16V 10U	1	
C2035		ECEA1HKA3R3	E.CAPACITOR 50V 3.3U	1	
C2036		ECEA0JKA220	E.CAPACITOR 6.3V 22U	1	
C2037		ECUM1H103ZFN	C.CAPACITOR CH 50V 0.01U	1	
C2038		ECUM1H104ZFN	C.CAPACITOR CH 50V 0.1U	1	
C2039		ECEA1HKA4R7	E.CAPACITOR 50V 4.7U	1	
C2040		ECUM1H222KBN	C.CAPACITOR CH 50V 2200P	1	
C2041		ECUM1H333KBN	C.CAPACITOR CH 50V 0.033U	1	
C2042		ECQV1H683JM	P.CAPACITOR 50V 0.068U	1	
C2043		ECEA1CKA470	E.CAPACITOR 16V 47U	1	
C2044		ECEA1HKA010	E.CAPACITOR 50V 1U	1	
C2045		ECEA1CKA470	E.CAPACITOR 16V 47U	1	
C2046		ECEA1HKAR47	E.CAPACITOR 50V 0.47U	1	
C2047		ECQV1H683JM	P.CAPACITOR 50V 0.068U	1	
C2048		ECEA1CKA470	E.CAPACITOR 16V 47U	1	
C2049		ECEA0JKA470	E.CAPACITOR 6.3V 47U	1	
C2050		ECUM1H101JCN	C.CAPACITOR CH 50V 100P	1	
C2051		ECUM1H104ZFN	C.CAPACITOR CH 50V 0.1U	1	
C2052		ECA0JM101	E.CAPACITOR 6.3V 100P	1	
C3001		ECUM1H102KBN	C.CAPACITOR CH 50V 1000P	1	
C3002,03		ECUM1H104ZFN	C.CAPACITOR CH 50V 0.1U	2	
C3004		ECUM1H103ZFN	C.CAPACITOR CH 50V 0.01U	1	
C3005		ECUM1H104ZFN	C.CAPACITOR CH 50V 0.1U	1	
C3006		ECUM1H103ZFN	C.CAPACITOR CH 50V 0.01U	1	
C3007		ECEA0JKA221	E.CAPACITOR 6.3V 220U	1	
C3008		ECEA1CKA100	E.CAPACITOR 16V 10U	1	
C3009		ECUM1H103ZFN	C.CAPACITOR CH 50V 0.01U	1	
C3010		ECEA0JKA470	E.CAPACITOR 6.3V 47U	1	
C3011		ECUM1H103ZFN	C.CAPACITOR CH 50V 0.01U	1	
C3012		ECUM1H620JCN	C.CAPACITOR CH 50V 62P	1	
C3013		ECUM1H330JCN	C.CAPACITOR CH 50V 33P	1	
C3014		ECUM1H680JCN	C.CAPACITOR CH 50V 68P	1	
C3015		ECUM1H220JCN	C.CAPACITOR CH 50V 22P	1	
C3016		ECUM1H151JCN	C.CAPACITOR CH 50V 150P	1	
C3017		ECUM1H103ZFN	C.CAPACITOR CH 50V 0.01U	1	
C3019		ECUM1H220JCN	C.CAPACITOR CH 50V 22P	1	
C3021		ECA0JM471	E.CAPACITOR 6.3V 470	1	
C3022		ECUM1H103ZFN	C.CAPACITOR CH 50V 0.01U	1	
C3023		ECEA1CKA470	E.CAPACITOR 16V 47U	1	
C3024		ECUM1H104ZFN	C.CAPACITOR CH 50V 0.1U	1	
C3025		ECEA0JKA470	E.CAPACITOR 6.3V 47U	1	
C3026,27		ECEA1CKA100	E.CAPACITOR 16V 10U	2	
C3028,29		ECUM1H332KBN	C.CAPACITOR CH 50V 3300P	2	
C3030		ECEA1CKA100	E.CAPACITOR 16V 10U	1	
C3031		ECUM1H102KBN	C.CAPACITOR CH 50V 1000P	1	

Ref.No.		Part No.	Part Name & Description	Pcs	Remarks
C3032		ECUM1H103ZFN	C.CAPACITOR CH 50V 0.01U	1	
C3033		ECUM1H681JCN	C.CAPACITOR 50V 680P	1	
C3034		ECUM1H104ZFN	C.CAPACITOR CH 50V 0.1U	1	
C3035		ECUM1H181JCN	C.CAPACITOR CH 50V 180P	1	
C3036		ECUM1H220JCN	C.CAPACITOR CH 50V 22P	1	
C3037		ECUM1H103ZFN	C.CAPACITOR CH 50V 0.01U	1	
C3038		ECEA1AFS221	E.CAPACITOR 10V 220U	1	
C3905,06		ECUM1H821JCN	C.CAPACITOR CH 50V 820P	2	
C3907,08		VCEA1CAD100	CAPACITOR	2	
C3911		ECEA1CKA100	E.CAPACITOR 16V 10U	1	
C3914,15		ECUM1C105ZFN	C.CAPACITOR CH 16V 1U	2	
C4001		ECUM1H103ZFN	C.CAPACITOR CH 50V 0.01U	1	
C4002		ECKD2H331KB	C.CAPACITOR 500V 330P	1	
C4003		ECQP1332JZ	P.CAPACITOR 50V 3300P	1	
C4004		ECQB1H102JZ	F.CAPACITOR 50V 1000P	1	
C4005		ECQB1H153JZ	P.CAPACITOR 50V 0.015U	1	
C4006		ECEA16M33	E.CAPACITOR 16V 33U	1	
C4007		ECUM1H221JCN	C.CAPACITOR CH 50V 220P	1	
C4008		ECUM1H681JCN	C.CAPACITOR 50V 680P	1	
C4009		ECUM1H221JCN	C.CAPACITOR CH 50V 220P	1	
C4010		ECUM1H683ZFN	C.CAPACITOR CH 50V 0.068U	1	
C4011		ECUM1H221JCN	C.CAPACITOR CH 50V 220P	1	
C4034		ECEA1HKA010	E.CAPACITOR 50V 1U	1	
C4503		ECUX1H152KBV	C.CAPACITOR CH 50V 1500P	1	
C4504,05		ECEA1CU470	E.CAPACITOR 16V 47U	2	
C4506		ECEA1CU100	E.CAPACITOR 16V 10U	1	
C4507		ECQB1H223JA	P.CAPACITOR 50V 0.022U	1	
C4508		ECEA1EKN4R7	E.CAPACITOR 25V 4.7U	1	
C4509		ECEA1AU470	E.CAPACITOR 10V 47U	1	
C4510		ECQB1H103JA	P.CAPACITOR 50V 0.01U	1	
C4511		ECQB1H332JA	P.CAPACITOR 50V 3300P	1	
C4512		ECUX1H561JV	C.CAPACITOR CH 50V 560P	1	
C4513		ECUX1H681JV	C.CAPACITOR CH 50V 680P	1	
C4514		ECUX1H561JV	C.CAPACITOR CH 50V 560P	1	
C4515		ECEA1EU4R7	E.CAPACITOR 25V 4.7U	1	
C4517		ECEA1AU101	E.CAPACITOR 10V 100U	1	
C4518		ECUX1C104ZFV	C.CAPACITOR CH 16V 0.1U	1	
C4521		ECUM1E473KBN	C.CAPACITOR CH 25V 0.047U	1	
C4522		ECEA1HU3R3	E.CAPACITOR 50V 3.3U	1	
C4524		ECEA1AU101	E.CAPACITOR 10V 100U	1	
C4528		ECUX1C104ZFV	C.CAPACITOR CH 16V 0.1U	1	
C4530		ECEA0JU470	E.CAPACITOR 6.3V 47U	1	
C4533		ECEA1AU330	E.CAPACITOR 10V 33U	1	
C4537		ECUX1H102JCV	C.CAPACITOR CH 50V 1000P	1	
C4538		ECEA1HUR47	E.CAPACITOR 50V 0.47U	1	
C4539		ECUM1C224ZFV	C.CAPACITOR CH 16V 0.22U	1	
C4541		ECUX1C104ZFV	C.CAPACITOR CH 16V 0.1U	1	
C4545		ECUX1H102JCV	C.CAPACITOR CH 50V 1000P	1	
C4551		ECQB1H223JA	P.CAPACITOR 50V 0.022U	1	
C4556		ECEA1CU100	E.CAPACITOR 16V 10U	1	
C4558		ECEA1EKN4R7	E.CAPACITOR 25V 4.7U	1	
C4559		ECEA1AU470	E.CAPACITOR 10V 47U	1	
C4560		ECQB1H103JA	P.CAPACITOR 50V 0.01U	1	
C4561		ECQB1H332JA	P.CAPACITOR 50V 3300P	1	
C4562		ECUX1H561JV	C.CAPACITOR CH 50V 560P	1	
C4563		ECUX1H681JV	C.CAPACITOR CH 50V 680P	1	
C4564		ECUX1H561JV	C.CAPACITOR CH 50V 560P	1	
C4565		ECEA1EU4R7	E.CAPACITOR 25V 4.7U	1	
C4567		ECEA1AU101	E.CAPACITOR 10V 100U	1	
C4568		ECUX1C104ZFV	C.CAPACITOR CH 16V 0.1U	1	
C4572		ECEA1HU3R3	E.CAPACITOR 50V 3.3U	1	
C4576		ECUM1E473KBN	C.CAPACITOR CH 25V 0.047U	1	
C4583		ECEA1AU330	E.CAPACITOR 10V 33U	1	
C4585,86		ECEA1AU101	E.CAPACITOR 10V 100U	2	
C4591		ECUX1C104ZFV	C.CAPACITOR CH 16V 0.1U	1	
C4592		ECUX1H152KBV	C.CAPACITOR CH 50V 1500P	1	
C4593		ECUX1H221JCV	C.CAPACITOR CH 50V 220P	1	
C4594,95		ECUX1H101JCV	C.CAPACITOR CH 50V 100P	2	
C4596		ECEA1CU100	E.CAPACITOR 16V 10U	1	
C4597		ECUX1H330JCV	C.CAPACITOR CH 50V 33P	1	
C4604		ECUM1H182JN	C.CAPACITOR CH 50V 1800P	1	
C4606		ECEA0JKA470	E.CAPACITOR 6.3V 47U	1	
C4616		ECUX1H102JCV	C.CAPACITOR CH 50V 1000P	1	
C4617		ECEA10M22	E.CAPACITOR 10V 22U	1	
C4618		ECQB1H822JZ	P.CAPACITOR 50V 8200P	1	

Ref.No.		Part No.	Part Name & Description	Pcs	Remarks
C4621		ECEA0JKA101	E.CAPACITOR 6.3V 100U	1	
C4629		ECQB1H822JZ	P.CAPACITOR 50V 8200P	1	
C4636		ECUX1H151JCV	C.CAPACITOR CH 50V 150P	1	
C4638		ECQB1H822JZ	P.CAPACITOR 50V 8200P	1	
C4652,53		ECUM1C105ZFN	C.CAPACITOR CH 16V 1U	2	
C6001		ECUM1H104ZFN	C.CAPACITOR CH 50V 0.1U	1	
C6002		ECUM1H103ZFN	C.CAPACITOR CH 50V 0.01U	1	
C6003		ECEA1HKA2R2	E.CAPACITOR 50V 2.2U	1	
C6004		ECUM1H221JCN	C.CAPACITOR CH 50V 220P	1	
C6005		ECUM1H223KBN	C.CAPACITOR CH 50V 0.022U	1	
C6006		ECUM1H472KBN	C.CAPACITOR CH 50V 4700P	1	
C6007,08		ECUM1H220JCN	C.CAPACITOR CH 50V 22P	2	
C6009		ECEA0JKA220	E.CAPACITOR 6.3V 22U	1	
C6010		ECQV1H104JM	P.CAPACITOR 50V 0.1U	1	
C6011		ECUM1H392KBN	C.CAPACITOR CH 50V 3900P	1	
C6012		ECUM1H103ZFN	C.CAPACITOR CH 50V 0.01U	1	
C6013		ECUM1H104ZFN	C.CAPACITOR CH 50V 0.1U	1	
C6014		ECEA0JKA220	E.CAPACITOR 6.3V 22U	1	
C6015,16		ECUM1H271JCN	C.CAPACITOR CH 50V 270P	2	
C6017		ECUM1H103ZFN	C.CAPACITOR CH 50V 0.01U	1	
C6018		ECUM1H102KBN	C.CAPACITOR CH 50V 1000P	1	
C6019		ECEA1CKA100	E.CAPACITOR 16V 10U	1	
C6025-28		ECUM1H103ZFN	C.CAPACITOR CH 50V 0.01U	4	
C7005		ECUM1C105ZFN	C.CAPACITOR CH 16V 1U	1	
C7006		ECEA1AKN100	E.CAPACITOR 10V 10U	1	
C7010		ECEA1CKA100	E.CAPACITOR 16V 10U	1	
C7012		ECUM1H104ZFN	C.CAPACITOR CH 50V 0.1U	1	
C7302		ECEA1CKN100	E.CAPACITOR 16V 10U	1	
C7303		ECQV1H393JZ	P.CAPACITOR 50V 0.039U	1	
C7304		ECEA1CKN100	E.CAPACITOR 16V 10U	1	
C7305		ECQV1H473JZ	P.CAPACITOR 50V 0.047U	1	
C7306		ECQB1H102KZ	P.CAPACITOR 50V 1000P	1	
C7307		ECQB1H822KZ	P.CAPACITOR 50V 8200P	1	
C7308		ECQB1H102KZ	P.CAPACITOR 50V 1000P	1	
C7309		ECQB1H152JH	P.CAPACITOR 50V 1500P	1	
C7310		ECEA16M10	E.CAPACITOR 16V	1	
C7311		ECEA50MR47	E.CAPACITOR 50V 0.47U	1	
C7312		ECQV1H224JM	P.CAPACITOR 50V 0.22U	1	
C7313		ECQV1H104JM	P.CAPACITOR 50V 0.1U	1	
C7314		ECQV1H224JM	P.CAPACITOR 50V 0.22U	1	
C7315		ECQV1H104JM	P.CAPACITOR 50V 0.1U	1	
C7316		ECQV1H224JM	P.CAPACITOR 50V 0.22U	1	
C7317		ECEA1CK101	E.CAPACITOR 16V 100U	1	
C7318		ECUM1H103ZFN	C.CAPACITOR CH 50V 0.01U	1	
C7319		ECEA1CK470	E.CAPACITOR 16V 47U	1	
C7320,21		ECEA1CK100	E.CAPACITOR 16V 10U	2	
C7323,24		ECQV1H393JZ	P.CAPACITOR 50V 0.039U	2	
C7331		ECQV1H474JM	P.CAPACITOR 50V 0.47U	1	
C7332,33		ECUM1H102ZFN	C.CAPACITOR CH 50V 1000P	2	
C7334		ECUM1H103ZFN	C.CAPACITOR CH 50V 0.01U	1	
C7335		ECEA1CK470	E.CAPACITOR 16V 47U	1	
C7336		ECUM1H103ZFN	C.CAPACITOR CH 50V 0.01U	1	
C7337		ECUM1H680JCN	C.CAPACITOR CH 50V 68P	1	
C7339		ECUM1H103ZFN	C.CAPACITOR CH 50V 0.01U	1	
C7341		ECUM1H070DCN	C.CAPACITOR CH 50V 7P	1	
C7342		ECQV1H823JM	P.CAPACITOR 50V 0.082U	1	
C7343		ECEA1CK100	E.CAPACITOR 16V 10U	1	
C7345		ECUM1H103ZFN	C.CAPACITOR CH 50V 0.01U	1	
C7347		ECUM1H070DCN	C.CAPACITOR CH 50V 7P	1	
C7348		ECQV1H393JZ	P.CAPACITOR 50V 0.039U	1	
C7349,50		ECUM1H221JCN	C.CAPACITOR CH 50V 220P	2	
C7351,52		ECUM1H103ZFN	C.CAPACITOR CH 50V 0.01U	2	
C7353		ECEA1CK470	E.CAPACITOR 16V 47U	1	
C7354		ECUM1H103ZFN	C.CAPACITOR CH 50V 0.01U	1	
C7355		ECEA1CK470	E.CAPACITOR 16V 47U	1	
C7356,57		ECUM1H103ZFN	C.CAPACITOR CH 50V 0.01U	2	
C7358		ECUM1H470JCN	C.CAPACITOR CH 50V 47P	1	
C7359		ECUM1H820JCN	C.CAPACITOR CH 50V 82P	1	
C7651		ECEA1CKN100	E.CAPACITOR 16V 10U	1	
C7653		ECQB1H392JH	P.CAPACITOR 50V 3900P	1	
C7654		ECQB1H103JH	P.CAPACITOR 50V 0.01U	1	
C7655,56		ECEA1HK010	E.CAPACITOR 50V 1U	2	
C7657		ECUM1H103ZFN	C.CAPACITOR CH 50V 0.01U	1	
C7658		ECQP1562JZ	P.CAPACITOR 100V 5600P	1	
C7659		ECQB1H272JH	P.CAPACITOR 50V 2700P	1	

Ref.No.		Part No.	Part Name & Description	Pcs	Remarks
C7661		ECQV1H104JM	P.CAPACITOR 50V 0.1U	1	
C7662		ECQV1H683JM	P.CAPACITOR 50V 0.068U	1	
C7663		ECQV1H823JM	P.CAPACITOR 50V 0.082U	1	
C7664		ECQB1H273JH	P.CAPACITOR 50V 0.027U	1	
C7665,66		ECUM1H103ZFN	C.CAPACITOR CH 50V 0.01U	2	
C7667		ECEA1HKA100	E.CAPACITOR 50V 10U	1	
C7670,71		ECUM1H103ZFN	C.CAPACITOR CH 50V 0.01U	2	
C7673		ECUM1H103ZFN	C.CAPACITOR CH 50V 0.01U	1	
C7675		ECEA1HKN010	E.CAPACITOR 50V 1U	1	
C7676,77		ECUM1H103ZFN	C.CAPACITOR CH 50V 0.01U	2	
C7678		ECEA1CK100	E.CAPACITOR 16V 10U	1	
C7679		ECEA1HKN010	E.CAPACITOR 50V 1U	1	
C7680		ECEA1HK010	E.CAPACITOR 50V 1U	1	
C7681		ECUM1H103ZFN	C.CAPACITOR CH 50V 0.01U	1	
D302		1SS283	DIODE	1	
D303		MA151A	DIODE	1	
D304		1SS254	DIODE	1	
D710		MA3100L	DIODE	1	
D773		MA151K	DIODE	1	
D801,02		1SS254	DIODE	2	
D804		1SS254	DIODE	1	
D2001		1SS254	DIODE	1	
D2002		MA153	DIODE	1	
D2003,04		1SS254	DIODE	2	
D2007,08		1SS254	DIODE	2	
D2009		MA151WK	DIODE	1	
D2010		MA151K	DIODE	1	
D3001		MA151K	DIODE	1	
D3003		1SS254	DIODE	1	
D3901		1SS254	DIODE	1	
D4001		MA151K	DIODE	1	
D4003		MA151WK	DIODE	1	
D4005		MA151K	DIODE	1	
D4501-04		MA141K	DIODE	4	
D6001		1SS254	DIODE	1	
D6002		MA151K	DIODE	1	
D6003		1SS254	DIODE	1	
D6005,06		1SS254	DIODE	2	
D6007		MA4075-L	DIODE	1	
D7002		MA723VT	DIODE	1	
D7004-06		11ES1	DIODE	3	
D7007		1SS254	DIODE	1	
D7303		MA28WA	DIODE	1	
D7304		MA3100L	DIODE	1	
D7601		MA151A	DIODE	1	
D7602		MA3082M	DIODE	1	
DL801		VLD0198	DELAY	1	
DL802		EFDUN124A13N	DELAY	1	
FE		VJS1141	CONNECTOR (FEMALE)	1	
FL881		VLF0143	FILTER	1	
IC301		VEFH29D	IC	1	
IC701		M51366SP	IC	1	
IC802		M52352FP	IC	1	
IC881		BA7025L	IC	1	
IC2001		XRA6887-V3	IC	1	
IC2002		BA6871	IC	1	
IC2004		LM358PS	IC	1	
IC3001		NJM2233BL	IC	1	
IC3002		BA7004	IC	1	
IC4002		NJM4558M	IC	1	
IC4501		XLH7773KS	IC	1	
IC4601		BA7755AF	IC	1	
IC6001		MN67434VRSR	IC	1	
IC7301		TDA3803A	IC	1	
IC7302		TA8721SN	IC	1	

Ref.No.		Part No.	Part Name & Description	Pcs	Remarks
IC7303		LA7975	IC	1	
IC7651		AN5421N	IC	1	
IC7652		AN5043	IC	1	
IC7653		MN4066BS	IC	1	
J3901		VJJ0348	JACK	1	
J3903		VJS3539	JACK	1	
L303		ELESQ220KA	COIL 22UH	1	
L304		ELESQ101KA	COIL 100UH	1	
L305		ELESQ121JA	COIL	1	
L306		ELESQ390KA	COIL 39UH	1	
L701,02		ELESQ680KA	COIL 68UH	2	
L711		ELQT1R2KB	COIL 1.2UH	1	
L713		VLQ0305JR82	COIL 0.82UH	1	
L714		VLQ0305J1R2	COIL 1.2UH	1	
L715		VLQ0213K680	COIL 68UH	1	
L717,18		ELESQ680KA	COIL 68UH	2	
L719		ELESQ5R6KA	COIL 5.6UH	1	
L720		ELESQ680KA	COIL 68UH	1	
L781		ELESQ680KA	COIL 68UH	1	
L801,02		VLQ0540K150	COIL H	2	
L803		ELESQ5R6KA	COIL 5.6UH	1	
L804		ELESQ101KA	COIL 100UH	1	
L805		ELESQ270KA	COIL 27UH	1	
L807,08		VLQ0540J150	COIL 15UH	2	
L809		ELESQ101KA	COIL 100UH	1	
L811,12		ELESQ101KA	COIL 100UH	2	
L881		ELESE101KA	COIL 100UH	1	
L2001		VLP0074	COIL	1	
L2002		ELESE102KA	COIL 1000UH	1	
L2003,04		VLQ0599J680	COIL	2	
L2005		VLP0083	COIL	1	
L2006		VLQ0599J680	COIL	1	
L3001		VLQ0599J680	COIL	1	
L3002		VLQ0599J151	COIL 150UH	1	
L3003		VLQ0599J820	COIL H	1	
L3005		VLQ0599J680	COIL	1	
L3006		VLQ0599J101	COIL 100UH	1	
L3007		VLQ0599J680	COIL	1	
L3009		VLQ0599J120	COIL H	1	
L3010		VLQ0599J6R8	COIL H	1	
L3011		VLQ0599J680	COIL	1	
L3012		VLQ0599J270	COIL 27UH	1	
L3013		VLQ0599J680	COIL	1	
L4001,02		ERJ6GMZ0R00	M.RESISTOR 1/10W 0	2	
L4501,02		ELESE101KA	COIL 100UH	2	
L4601		VLQEL07F153J	COIL 15MH	1	
L6001		VLP0074	COIL	1	
L6005		VLQ0599J331	COIL H	1	
L7003		VLQ0599J1R0	COIL 1UH	1	
L7004		VLQ0599J680	COIL	1	
L7005		VLQ0599J1R0	COIL 1UH	1	
L7006		VLQ0599J680	COIL	1	
L7301		ELESQ102KA	COIL 1000UH	1	
L7302		ELESQ100KA	COIL 10UH	1	
P1001		VJS3537A010G	CONNECTOR (FEMALE) 10P	1	
P2001		VJP1232T	CONNECTOR (MALE) 5P	1	
P2001		VJS1738T	CONNECTOR (FEMALE)	1	
P2002		VJS3537A015G	CONNECTOR (FEMALE) 15P	1	
P2003		VJP3502	CONNECTOR (MALE)	1	
P2503		VJS3482	CONNECTOR (FEMALE)	1	
P2902		VJS1738T	CONNECTOR (FEMALE)	1	
P3001		VJS3537A020G	CONNECTOR (FEMALE) 20P	1	
P4001		VJS2331	CONNECTOR (FEMALE)	1	
P4002		VJP1230T	CONNECTOR (MALE) 3P	1	
P4002		VJS1230T	CONNECTOR (FEMALE)	1	
P6001		VJS3537A025G	CONNECTOR (FEMALE) 25P	1	
P6002		VJS3537A012G	CONNECTOR (FEMALE) 12P	1	
P6003		VJP1242T	CONNECTOR (MALE) 2P	1	
P6004		VJS3537A013G	CONNECTOR (FEMALE) 13P	1	

Ref.No.		Part No.	Part Name & Description	Pcs	Remarks
PK881		VJR0456	PACK PIN	1	
PK4001-03		VJR0757B018T	CONNECTOR	3	
PP3001		VJP3044G009W	CONNECTOR (MALE) 9P	1	
PP3002		VJP3044G012W	CONNECTOR (MALE) 12P	1	
PP3003		VJP3044G006W	CONNECTOR (MALE) 6P	1	
PP7001		VJP3043A006W	CONNECTOR (MALE) 6P	1	
PP7002-04		VJP3043A005W	CONNECTOR (MALE) 5P	3	
PP7005		VJP3043A004W	CONNECTOR (MALE) 4P	1	
PP7006		VJP3043A010W	CONNECTOR (MALE) 10P	1	
PS301		VJS3044F009W	CONNECTOR (FEMALE) 9P	1	
PS302		VJS3044F012W	CONNECTOR (FEMALE) 12P	1	
PS303		VJS3044F006W	CONNECTOR (FEMALE) 6P	1	
PS701-03		VJS3043B005W	CONNECTOR (FEMALE) 5P	3	
PS704		VJS3043B006W	CONNECTOR (FEMALE) 6P	1	
PS7301,02		VJR0477	PACK PIN	2	
Q703		MSD601-S	TRANSISTOR	1	
Q710		2SC1047	TRANSISTOR	1	
Q712		2SC1317	TRANSISTOR	1	
Q771,72		MSD601-S	TRANSISTOR	2	
Q801		MSC2295	TRANSISTOR	1	
Q802		MSD601	TRANSISTOR	1	
Q808		MSB709	TRANSISTOR	1	
Q1001		MSD1328	TRANSISTOR	1	
Q3001,02		MSD601-R	TRANSISTOR	2	
Q3003		MSB709-R	TRANSISTOR	1	
Q3004,05		MSD601-R	TRANSISTOR	2	
Q3006		MSC2295	TRANSISTOR	1	
Q3007		MSB709-R	TRANSISTOR	1	
Q3008		MSC2295	TRANSISTOR	1	
Q3010		2SB709	TRANSISTOR	1	
Q3011		2SB1321-R	TRANSISTOR	1	
Q4002		2SD602A-R	TRANSISTOR	1	
Q4003		MSD601	TRANSISTOR	1	
Q4501		2SD655	TRANSISTOR	1	
Q4551		2SB561	TRANSISTOR	1	
Q4552		2SD1819A	TRANSISTOR	1	
Q6001		2SD1991A	TRANSISTOR	1	
Q6002		MSB709-R	TRANSISTOR	1	
Q6004,05		2SB1321-R	TRANSISTOR	2	
Q7301		MSD601-S	TRANSISTOR	1	
Q7304,05		MSD601	TRANSISTOR	2	
Q7306		2SC2404-C	TRANSISTOR	1	
Q7307		2SD1328-S	TRANSISTOR	1	
QR303		MRN2404	TRANSISTOR-RESISTOR	1	
QR306		MRN1404	TRANSISTOR-RESISTOR	1	
QR701,02		MRN1404	TRANSISTOR-RESISTOR	2	
QR711,12		MRN1403	TRANSISTOR-RESISTOR	2	
QR713		MRN1402	TRANSISTOR-RESISTOR	1	
QR804		MRN2404	TRANSISTOR-RESISTOR	1	
QR805		MRN1404	TRANSISTOR-RESISTOR	1	
QR2001		UN2113T	TRANSISTOR-RESISTOR	1	
QR2002		UN2114	TRANSISTOR-RESISTOR	1	
QR2003		XN1213	TRANSISTOR-TRANSISTOR	1	
QR2004		UN2112T	TRANSISTOR-RESISTOR	1	
QR3001		UN2111T	TRANSISTOR-RESISTOR	1	
QR3002,03		DTC363EK	TRANSISTOR-RESISTOR	2	
QR3006		UN2213T	TRANSISTOR-RESISTOR	1	
QR4001,02		UN2213T	TRANSISTOR-RESISTOR	2	
QR4508,09		UN5113	TRANSISTOR-RESISTOR	2	
QR4510		UN5212	TRANSISTOR-RESISTOR	1	
QR6001		XN1211	TRANSISTOR-RESISTOR	1	
QR6003		UN2211T	TRANSISTOR-RESISTOR	1	
QR6004		UN2212T	TRANSISTOR-RESISTOR	1	
QR7301,02		MRN1404	TRANSISTOR-RESISTOR	2	
QR7312-14		MRN1402	TRANSISTOR-RESISTOR	3	

Ref.No.		Part No.	Part Name & Description	Pcs	Remarks
QR7315,16		MRN1404	TRANSISTOR-RESISTOR	2	
QR7317		XN1213	TRANSISTOR-TRANSISTOR	1	
QR7601		MRN1404	TRANSISTOR-RESISTOR	1	
R304		ERJ6GMZ0R00	M.RESISTOR 1/10W 0	1	
R307		ERJ6GEYJ472	M.RESISTOR CH 1/10W 4.7K	1	
R308		ERJ6GMYJ472	M.RESISTOR CH 1/10W 4.7K	1	
R310		ERJ6GMYJ272	M.RESISTOR CH 1/10W 2.7K	1	
R312		ERJ6GMYJ473	M.RESISTOR CH 1/10W 47K	1	
R315		ERJ6GMYJ393	M.RESISTOR CH 1/10W 39K	1	
R316		ERJ6GMYJ392	M.RESISTOR CH 1/10W 3.9K	1	
R318,19		ERJ6GMYJ103	M.RESISTOR CH 1/10W 10K	2	
R322		ERJ6GMYJ332	M.RESISTOR CH 1/10W 3.3K	1	
R327		ERJ6GEYK125	M.RESISTOR CH 1/10W 1.2M	1	
R712		ERJ6GEYJ682	M.RESISTOR CH 1/10W 6.8K	1	
R713		ERJ6GEYJ681	M.RESISTOR CH 1/10W 680	1	
R714		ERD2FCG330	C.RESISTOR 2W 33	1	<!>
R715		ERJ6GEYJ271	M.RESISTOR CH 1/10W 270	1	
R716		ERJ6GEYJ102	M.RESISTOR CH 1/10W 1K	1	
R717		ERJ6GEYJ332	M.RESISTOR CH 1/10W 3.3K	1	
R718		ERJ6GEYJ754	M.RESISTOR CH 1/10W 750K	1	
R719		ERJ6GEYJ682	M.RESISTOR CH 1/10W 6.8K	1	
R720		ERJ6GEYJ822	M.RESISTOR CH 1/10W 8.2K	1	
R721,22		ERJ6GEYJ392	M.RESISTOR CH 1/10W 3.9K	2	
R723		ERJ6GEYJ183	M.RESISTOR CH 1/10W 18K	1	
R724		ERJ6GEYJ101	M.RESISTOR CH 1/10W 100	1	
R725		ERJ6GEYJ182	M.RESISTOR CH 1/10W 1.8K	1	
R726		ERJ6GEYJ472	M.RESISTOR CH 1/10W 4.7K	1	
R727		ERJ6GEYJ471	M.RESISTOR CH 1/10W 470	1	
R728		ERDS2TJ471	C.RESISTOR 1/4W 470	1	
R737		ERJ6GEYJ274	M.RESISTOR CH 1/10W 270K	1	
R738		ERJ6GEYJ334	M.RESISTOR CH 1/10W 330K	1	
R740		ERJ6GEYJ473	M.RESISTOR CH 1/10W 47K	1	
R743		ERJ6GEYJ470	M.RESISTOR CH 1/10W 47	1	
R744		ERJ6GEYJ821	M.RESISTOR CH 1/10W 820	1	
R745		ERJ6GEYJ121	M.RESISTOR CH 1/10W 120	1	
R746		ERDS2TJ181	C.RESISTOR 1/4W 180	1	
R750		ERJ6GEYJ102	M.RESISTOR CH 1/10W 1K	1	
R751		ERJ6GEYJ562	M.RESISTOR CH 1/10W 5.6K	1	
R756		ERJ6GEYJ103	M.RESISTOR CH 1/10W 10K	1	
R758		ERJ6GEYJ102	M.RESISTOR CH 1/10W 1K	1	
R772		ERJ6GEYJ271	M.RESISTOR CH 1/10W 270	1	
R773		ERJ6GEYJ472	M.RESISTOR CH 1/10W 4.7K	1	
R774		ERJ6GEYJ562	M.RESISTOR CH 1/10W 5.6K	1	
R781		ERJ6GEYJ271	M.RESISTOR CH 1/10W 270	1	
R782		ERJ6GEYJ471	M.RESISTOR CH 1/10W 470	1	
R792		ERDS2TJ120	C.RESISTOR 1/4W 12	1	
R795		ERJ6GEYJ222	M.RESISTOR CH 1/10W 2.2K	1	
R799		ERJ6GEYJ681	M.RESISTOR CH 1/10W 680	1	
R801		ERJ6GMYJ102	M.RESISTOR CH 1/10W 1K	1	
R802,03		ERJ6GMYJ471	M.RESISTOR CH 1/10W 470	2	
R804,05		ERJ6GMYJ103	M.RESISTOR CH 1/10W 10K	2	
R806		ERJ6GMYJ221	M.RESISTOR CH 1/10W 220	1	
R807		ERJ6GMYJ271	M.RESISTOR CH 1/10W 270	1	
R813		ERJ6GMYJ102	M.RESISTOR CH 1/10W 1K	1	
R814		ERJ6GMYJ393	M.RESISTOR CH 1/10W 39K	1	
R815		ERJ6GMYJ821	M.RESISTOR CH 1/10W 820	1	
R816		ERJ6GMYJ471	M.RESISTOR CH 1/10W 470	1	
R817		ERJ6GMYJ182	M.RESISTOR CH 1/10W 1.8K	1	
R818		ERJ6GMYJ681	M.RESISTOR CH 1/10W 680	1	
R819		ERJ6GMYJ272	M.RESISTOR CH 1/10W 2.7K	1	
R820,21		ERJ6GMYJ122	M.RESISTOR CH 1/10W 1.2K	2	
R823,24		ERJ6GMYJ152	M.RESISTOR CH 1/10W 1.5K	2	
R825		ERJ6GMZ0R00	M.RESISTOR 1/10W 0	1	
R827		ERJ6GMYJ122	M.RESISTOR CH 1/10W 1.2K	1	
R828		ERJ6GMYJ271	M.RESISTOR CH 1/10W 270	1	
R829		ERJ6GMYJ122	M.RESISTOR CH 1/10W 1.2K	1	
R830		ERJ6GMYJ271	M.RESISTOR CH 1/10W 270	1	
R831		ERJ6GMYJ681	M.RESISTOR CH 1/10W 680	1	
R832		ERJ6GMYJ154	M.RESISTOR CH 1/10W 150K	1	
R833		ERJ6GMYJ204	M.RESISTOR CH 1/10W 200K	1	
R834		ERJ6GMYJ153	M.RESISTOR CH 1/10W 15K	1	
R835		ERJ6GMYJ103	M.RESISTOR CH 1/10W 10K	1	
R836		ERJ6GMYJ154	M.RESISTOR CH 1/10W 150K	1	

Ref.No.		Part No.	Part Name & Description	Pcs	Remarks
R848		ERJ6GMYJ222	M.RESISTOR CH 1/10W 2.2K	1	
R849		ERJ6GMYJ473	M.RESISTOR CH 1/10W 47K	1	
R850		ERJ6GMYJ563	M.RESISTOR CH 1/10W 56K	1	
R853		ERJ6GMYJ473	M.RESISTOR CH 1/10W 47K	1	
R855		ERJ6GMYJ152	M.RESISTOR CH 1/10W 1.5K	1	
R856		ERJ6GMYJ102	M.RESISTOR CH 1/10W 1K	1	
R857		ERJ6GMYJ101	M.RESISTOR CH 1/10W 100	1	
R859		ERJ6GMYJ102	M.RESISTOR CH 1/10W 1K	1	
R881		ERJ6GMYJ223	M.RESISTOR CH 1/10W 22K	1	
R882		ERJ6GMYJ390	M.RESISTOR CH 1/10W 39	1	
R883		ERJ6GMYJ154	M.RESISTOR CH 1/10W 150K	1	
R884		ERJ6GMYJ222	M.RESISTOR CH 1/10W 2.2K	1	
R885		ERJ6GMYJ102	M.RESISTOR CH 1/10W 1K	1	
R886		ERJ6GMYJ103	M.RESISTOR CH 1/10W 10K	1	
R1001		ERJ6GMYJ102	M.RESISTOR CH 1/10W 1K	1	
R2001		ERJ6GMYG512	M.RESISTOR CH 1/10W 5.1K	1	
R2002		ERJ6GMYG913	M.RESISTOR CH 1/10W 91K	1	
R2003		ERX1SJ1R8	M.RESISTOR 1W 1.8	1	
R2004-06		ERJ6GMYJ102	M.RESISTOR CH 1/10W 1K	3	
R2007,08		ERJ6GMYJ392	M.RESISTOR CH 1/10W 3.9K	2	
R2009		ERX12SJR47	M.RESISTOR 1/12W 0.47U	1	
R2010		ERDS2TJ560	C.RESISTOR 1/4W 56	1	
R2011,12		ERJ6GMYJ105	M.RESISTOR CH 1/10W 1M	2	
R2013		ERDS2TJ681	C.RESISTOR 1/4W 680	1	
R2014		ERJ6GMYG821	M.RESISTOR CH 1/10W 820	1	
R2015,16		ERDS2TJ560	C.RESISTOR 1/4W 56	2	
R2017		ERDS1TJ561	C.RESISTOR 1/2W 560	1	
R2018		ERJ6GMYJ222	M.RESISTOR CH 1/10W 2.2K	1	
R2019		ERJ6GMYG432	M.RESISTOR CH 1/10W 4.3K	1	
R2020		ERJ6GMYG473	M.RESISTOR CH 1/10W 47K	1	
R2021		ERJ6GMYJ104	M.RESISTOR CH 1/10W 100K	1	
R2022		ERJ6GMYJ683	M.RESISTOR CH 1/10W 68K	1	
R2023		ERJ6GMYJ333	M.RESISTOR CH 1/10W 33K	1	
R2024		ERJ6GMYJ563	M.RESISTOR CH 1/10W 56K	1	
R2025		ERJ6GMYJ682	M.RESISTOR CH 1/10W 6.8K	1	
R2026		ERJ6GMYJ684	M.RESISTOR CH 1/10W 680K	1	
R2027,28		ERJ6GMYJ223	M.RESISTOR CH 1/10W 22K	2	
R2029		ERJ6GMYJ272	M.RESISTOR CH 1/10W 2.7K	1	
R2031		ERJ6GMYJ244	M.RESISTOR CH 1/10W 220K	1	
R2032		ERJ6GMYG103	M.RESISTOR CH 1/10W 10K	1	
R2033		ERJ6GMYG133	M.RESISTOR CH 1/10W 13K	1	
R2034		ERJ6GMYJ102	M.RESISTOR CH 1/10W 1K	1	
R2035		ERJ6GMYJ105	M.RESISTOR CH 1/10W 1M	1	
R2036,37		ERJ6GMYJ472	M.RESISTOR CH 1/10W 4.7K	2	
R2038		ERJ6GMYJ683	M.RESISTOR CH 1/10W 68K	1	
R2039		ERJ6GMYJ472	M.RESISTOR CH 1/10W 4.7K	1	
R2040		ERJ6GMYJ332	M.RESISTOR CH 1/10W 3.3K	1	
R2041		ERJ6GMYJ221	M.RESISTOR CH 1/10W 220	1	
R2042,43		ERJ6GMYJ223	M.RESISTOR CH 1/10W 22K	2	
R2044		ERJ6GMYJ102	M.RESISTOR CH 1/10W 1K	1	
R2045		ERJ6GMYJ104	M.RESISTOR CH 1/10W 100K	1	
R2046		ERJ6GMYG273	M.RESISTOR CH 1/10W 27K	1	
R2047		ERJ6GMYJ104	M.RESISTOR CH 1/10W 100K	1	
R2048		ERJ6GMYG124	M.RESISTOR CH 1/10W 120K	1	
R2050		ERJ6GMYJ683	M.RESISTOR CH 1/10W 68K	1	
R2051		ERJ6GMYJ392	M.RESISTOR CH 1/10W 3.9K	1	
R2053,54		ERJ6GMYJ222	M.RESISTOR CH 1/10W 2.2K	2	
R2055		ERJ6GMYJ471	M.RESISTOR CH 1/10W 470	1	
R2056,57		ERJ6GMYJ822	M.RESISTOR CH 1/10W 8.2K	2	
R2060		ERDS2TJ332	C.RESISTOR 1/4W 3.3K	1	
R3001		ERJ6GMYJ102	M.RESISTOR CH 1/10W 1K	1	
R3002		ERJ6GMYJ222	M.RESISTOR CH 1/10W 2.2K	1	
R3003		ERJ6GMYJ103	M.RESISTOR CH 1/10W 10K	1	
R3004		ERJ6GMYJ272	M.RESISTOR CH 1/10W 2.7K	1	
R3005		ERJ6GMYJ332	M.RESISTOR CH 1/10W 3.3K	1	
R3006		ERDS2TJ471	C.RESISTOR 1/4W 470	1	
R3007		ERJ6GMYJ222	M.RESISTOR CH 1/10W 2.2K	1	
R3008		ERJ6GMYJ681	M.RESISTOR CH 1/10W 680	1	
R3009		ERJ6GMYJ222	M.RESISTOR CH 1/10W 2.2K	1	
R3010		ERJ6GMYJ102	M.RESISTOR CH 1/10W 1K	1	
R3011		ERJ6GMYJ561	M.RESISTOR CH 1/10W 560	1	
R3012,13		ERJ6GMYJ473	M.RESISTOR CH 1/10W 47K	2	
R3014		ERJ6GMYJ223	M.RESISTOR CH 1/10W 22K	1	
R3015,16		ERJ6GMYJ561	M.RESISTOR CH 1/10W 560	2	
R3017		ERJ6GMYJ391	M.RESISTOR CH 1/10W 390	1	

Ref.No.		Part No.	Part Name & Description	Pcs	Remarks
R3018		ERJ6GMYJ102	M.RESISTOR CH 1/10W 1K	1	
R3019,20		ERJ6GMYJ821	M.RESISTOR CH 1/10W 820	2	
R3021		ERJ6GMYJ122	M.RESISTOR CH 1/10W 1.2K	1	
R3022		ERJ6GMYJ102	M.RESISTOR CH 1/10W 1K	1	
R3023		ERJ6GMYJ103	M.RESISTOR CH 1/10W 10K	1	
R3024		ERJ6GMYJ332	M.RESISTOR CH 1/10W 3.3K	1	
R3025		ERJ6GMYJ152	M.RESISTOR CH 1/10W 1.5K	1	
R3026,27		ERJ6GMYJ102	M.RESISTOR CH 1/10W 1K	2	
R3028		ERJ6GMYJ471	M.RESISTOR CH 1/10W 470	1	
R3030		ERJ6GMYJ103	M.RESISTOR CH 1/10W 10K	1	
R3031		ERJ6GMYJ152	M.RESISTOR CH 1/10W 1.5K	1	
R3032		ERJ6GMYJ561	M.RESISTOR CH 1/10W 560	1	
R3033		ERJ6GMYJ223	M.RESISTOR CH 1/10W 22K	1	
R3035,36		ERJ6GMYJ223	M.RESISTOR CH 1/10W 22K	2	
R3037		ERJ6GMYJ222	M.RESISTOR CH 1/10W 2.2K	1	
R3038		ERJ6GMYJ102	M.RESISTOR CH 1/10W 1K	1	
R3901,02		ERJ6GMYJ471	M.RESISTOR CH 1/10W 470	2	
R3903,04		ERJ6GMYJ102	M.RESISTOR CH 1/10W 1K	2	
R3905,06		ERJ6GMYJ750	M.RESISTOR CH 1/10W 75	2	
R3908		ERDS2TJ151	C.RESISTOR 1/4W 150	1	
R3909		ERDS2TJ393	C.RESISTOR 1/4W 39K	1	
R3912		ERDS2TJ393	C.RESISTOR 1/4W 39K	1	
R3913		ERJ6GMYJ391	M.RESISTOR CH 1/10W 390	1	
R3915		ERJ6GMYJ750	M.RESISTOR CH 1/10W 75	1	
R3917		ERJ6GMZ0R00	M.RESISTOR 1/10W 0	1	
R3919		ERJ6GMYJ391	M.RESISTOR CH 1/10W 390	1	
R3920		ERJ6GMZ0R00	M.RESISTOR 1/10W 0	1	
R3921		ERDS2TJ151	C.RESISTOR 1/4W 150	1	
R3922,23		ERJ6GMYJ223	M.RESISTOR CH 1/10W 22K	2	
R4001		ERJ6GMYJ332	M.RESISTOR CH 1/10W 3.3K	1	
R4003		ERJ6GMYJ392	M.RESISTOR CH 1/10W 3.9K	1	
R4004		ERJ6GMYJ183	M.RESISTOR CH 1/10W 18K	1	
R4005		ERJ6GMYJ823	M.RESISTOR CH 1/10W 82K	1	
R4006		ERJ6GMYJ273	M.RESISTOR CH 1/10W 27K	1	
R4007		ERJ6GMYJ683	M.RESISTOR CH 1/10W 68K	1	
R4008		ERJ6GMYJ823	M.RESISTOR CH 1/10W 82K	1	
R4009		ERJ6GMYJ100	M.RESISTOR CH 1/10W 10	1	
R4010,11		ERJ6GMYJ823	M.RESISTOR CH 1/10W 82K	2	
R4012		ERJ6GMYJ103	M.RESISTOR CH 1/10W 10K	1	
R4013		ERJ6GMYJ272	M.RESISTOR CH 1/10W 2.7K	1	
R4014		ERJ6GMYJ562	M.RESISTOR CH 1/10W 5.6K	1	
R4016		ERJ6GMYJ272	M.RESISTOR CH 1/10W 2.7K	1	
R4017		ERDS2TJ103	C.RESISTOR 1/4W 10K	1	
R4018		ERJ6GMYJ333	M.RESISTOR CH 1/10W 33K	1	
R4501,02		ERJ3GEY0R00	M.RESISTOR CH 1/16W 0	2	
R4503		VRE0071E36C	M.RESISTOR CH 1/10W	1	
R4504,05		ERJ3GEYJ393	M.RESISTOR CH 1/16W 39K	2	
R4506,07		ERJ3GEYJ473	M.RESISTOR CH 1/16W 47K	2	
R4508		ERJ3GEYG224	M.RESISTOR CH 1/16W 220K	1	
R4509		VRE0071E622	M.RESISTOR CH 1/10W	1	
R4511		ERJ3GEYG273	M.RESISTOR CH 1/16W 27K	1	
R4512		VRE0071E153	M.RESISTOR CH 1/10W	1	
R4513		ERJ3GEYG103	M.RESISTOR CH 1/16W 10K	1	
R4518,19		ERJ3GEY0R00	M.RESISTOR CH 1/16W 0	2	
R4522		ERJ3GEYJ225	M.RESISTOR CH 1/16W 2.2M	1	
R4527		VRE0071E333	M.RESISTOR CH 1/10W	1	
R4528		VRE0071E153	M.RESISTOR CH 1/10W	1	
R4529		ERJ3GEYG562	M.RESISTOR CH 1/16W 5.6K	1	
R4530		ERJ3GEYJ334	M.RESISTOR CH 1/16W 330K	1	
R4534		ERJ3GEYJ472	M.RESISTOR CH 1/16W 4.7K	1	
R4535		ERJ3GEYJ104	M.RESISTOR CH 1/16W 100K	1	
R4539		ERJ3GEYJ104	M.RESISTOR CH 1/16W 100K	1	
R4541		ERJ3GEYJ152	M.RESISTOR CH 1/16W 1.5K	1	
R4542		ERJ3GEYJ222	M.RESISTOR CH 1/16W 2.2K	1	
R4543		ERJ3GEYJ472	M.RESISTOR CH 1/16W 4.7K	1	
R4551,52		ERJ3GEYJ393	M.RESISTOR CH 1/16W 39K	2	
R4553,54		ERJ3GEYJ273	M.RESISTOR CH 1/16W 27K	2	
R4558		ERJ3GEYG224	M.RESISTOR CH 1/16W 220K	1	
R4561		ERJ3GEYG273	M.RESISTOR CH 1/16W 27K	1	
R4562		VRE0034E123	M.RESISTOR CH 1/10W 12K	1	
R4563		ERJ3GEYG272	M.RESISTOR CH 1/16W 2.7K	1	
R4568,69		ERJ3GEYJ273	M.RESISTOR CH 1/16W 27K	2	
R4572		ERJ3GEYJ473	M.RESISTOR CH 1/16W 47K	1	
R4573		ERJ3GEYJ152	M.RESISTOR CH 1/16W 1.5K	1	
R4577		ERJ3GEYJ473	M.RESISTOR CH 1/16W 47K	1	

Ref.No.		Part No.	Part Name & Description	Pcs	Remarks
R4578		VRE0071E473	M.RESISTOR CH 1/10W	1	
R4581		ERJ3GEYJ104	M.RESISTOR CH 1/16W 100K	1	
R4583		ERJ3GEYJ102	M.RESISTOR CH 1/16W 1K	1	
R4584		ERJ3GEYJ152	M.RESISTOR CH 1/16W 1.5K	1	
R4585		ERJ3GEY0R00	M.RESISTOR CH 1/16W 0	1	
R4586		ERJ3GEYJ152	M.RESISTOR CH 1/16W 1.5K	1	
R4587,88		ERJ3GEYJ273	M.RESISTOR CH 1/16W 27K	2	
R4591		ERJ3GEYJ473	M.RESISTOR CH 1/16W 47K	1	
R4592		ERJ3GEYJ563	M.RESISTOR CH 1/16W 56K	1	
R4593		ERJ3GEYJ472	M.RESISTOR CH 1/16W 4.7K	1	
R4594		ERJ3GEYJ473	M.RESISTOR CH 1/16W 47K	1	
R4596		ERJ3GEYG473	M.RESISTOR CH 1/16W 47K	1	
R4597		ERJ3GEYJ103	M.RESISTOR CH 1/16W 10K	1	
R4598,99		ERJ3GEYG104	M.RESISTOR CH 1/16W 100K	2	
R4603		ERJ3GEYG183	M.RESISTOR CH 1/16W 18K	1	
R4606		VRE0071E562	M.RESISTOR	1	
R4610		ERJ3GEYJ473	M.RESISTOR CH 1/16W 47K	1	
R4611		ERJ3GEYJ101	M.RESISTOR CH 1/16W 100	1	
R4612		VRE0071E331	M.RESISTOR CH 1/10W	1	
R4613		ERJ3GEYG394	M.RESISTOR CH 1/16W 390K	1	
R4615		VRE0071E133	M.RESISTOR CH 1/10W	1	
R4616		ERJ3GEYJ105	M.RESISTOR CH 1/16W 1M	1	
R4649		ERJ3GEYJ470	M.RESISTOR CH 1/16W 47	1	
R4653		ERJ3GEYJ331	M.RESISTOR CH 1/16W 330	1	
R4656		ERJ3GEYG243	M.RESISTOR CH 1/16W 24K	1	
R4657		ERJ3GEYJ392	M.RESISTOR CH 1/16W 3.9K	1	
R4666		ERJ3GEYJ471	M.RESISTOR CH 1/16W 470	1	
R4670		ERJ3GEYJ822	M.RESISTOR CH 1/16W 8.2K	1	
R4671		ERJ3GEY0R00	M.RESISTOR CH 1/16W 0	1	
R6001		ERJ6GMYJ103	M.RESISTOR CH 1/10W 10K	1	
R6002		ERJ6GMYG272	M.RESISTOR CH 1/10W 2.7K	1	
R6004		ERJ6GMYJ102	M.RESISTOR CH 1/10W 1K	1	
R6005-07		ERJ6GMYJ333	M.RESISTOR CH 1/10W 33K	3	
R6008		ERJ6GMYJ272	M.RESISTOR CH 1/10W 2.7K	1	
R6009-11		ERJ6GMYJ102	M.RESISTOR CH 1/10W 1K	3	
R6012		ERJ6GMYJ272	M.RESISTOR CH 1/10W 2.7K	1	
R6013		ERDS2CKG2000	M.RESISTOR 1/4W 200	1	
R6014,15		ERJ6GMYG223	M.RESISTOR CH 1/10W 22K	2	
R6016		ERJ6GMYJ103	M.RESISTOR CH 1/10W 10K	1	
R6017		ERJ6GMYJ271	M.RESISTOR CH 1/10W 270	1	
R6018		ERJ6GMYJ683	M.RESISTOR CH 1/10W 68K	1	
R6019		ERJ6GMYJ103	M.RESISTOR CH 1/10W 10K	1	
R6020		ERJ6GMYJ222	M.RESISTOR CH 1/10W 2.2K	1	
R6021		ERJ6GMYJ103	M.RESISTOR CH 1/10W 10K	1	
R6022		ERJ6GMYJ101	M.RESISTOR CH 1/10W 100	1	
R6023		ERJ6GMYJ104	M.RESISTOR CH 1/10W 100K	1	
R6024-29		ERJ6GMYJ102	M.RESISTOR CH 1/10W 1K	6	
R6030,31		ERJ6GMYJ103	M.RESISTOR CH 1/10W 10K	2	
R6032,33		ERJ6GMYJ272	M.RESISTOR CH 1/10W 2.7K	2	
R6034,35		ERJ6GMYJ221	M.RESISTOR CH 1/10W 220	2	
R6036		ERJ6GMYJ104	M.RESISTOR CH 1/10W 100K	1	
R6037		ERJ6GMYJ224	M.RESISTOR CH 1/10W 220K	1	
R6038		ERJ6GMYJ223	M.RESISTOR CH 1/10W 22K	1	
R6039		ERJ6GMYJ183	M.RESISTOR CH 1/10W 18K	1	
R6040		ERJ6GMYJ333	M.RESISTOR CH 1/10W 33K	1	
R6042		ERJ6GMYJ103	M.RESISTOR CH 1/10W 10K	1	
R6043		ERJ6GMYJ332	M.RESISTOR CH 1/10W 3.3K	1	
R6044		ERJ6GMYJ222	M.RESISTOR CH 1/10W 2.2K	1	
R6048		ERJ6GMYJ332	M.RESISTOR CH 1/10W 3.3K	1	
R6049		ERJ6GMYJ152	M.RESISTOR CH 1/10W 1.5K	1	
R6050		ERJ6GMYJ332	M.RESISTOR CH 1/10W 3.3K	1	
R6051		ERJ6GMYJ472	M.RESISTOR CH 1/10W 4.7K	1	
R7001,02		ERJ6GMYJ151	M.RESISTOR CH 1/10W 150	2	
R7302		ERJ6GEYJ392	M.RESISTOR CH 1/10W 3.9K	1	
R7303		ERJ6GEYJ182	M.RESISTOR CH 1/10W 1.8K	1	
R7304		ERJ6GEYJ392	M.RESISTOR CH 1/10W 3.9K	1	
R7305		ERJ6GEYJ822	M.RESISTOR CH 1/10W 8.2K	1	
R7306		ERJ6GEYJ471	M.RESISTOR CH 1/10W 470	1	
R7307		ERJ6GEYJ104	M.RESISTOR CH 1/10W 100K	1	
R7308		ERJ6GEYJ273	M.RESISTOR CH 1/10W 27K	1	
R7309		ERDS2TJ102	C.RESISTOR 1/4W 1K	1	
R7310		ERJ6GEYJ474	M.RESISTOR CH 1/10W 470K	1	
R7311		ERJ6GEYJ562	M.RESISTOR CH 1/10W 5.6K	1	
R7312		ERJ6GEYJ563	M.RESISTOR CH 1/10W 56K	1	
R7313		ERJ6GEYJ824	M.RESISTOR CH 1/10W 820K	1	

Ref.No.		Part No.	Part Name & Description	Pcs	Remarks
R7314,15		ERJ6GEYJ224	M.RESISTOR CH 1/10W 220K	2	
R7316		ERJ6GEYJ473	M.RESISTOR CH 1/10W 47K	1	
R7317		ERJ6GEYJ393	M.RESISTOR CH 1/10W 39K	1	
R7318		ERJ6GEYJ153	M.RESISTOR CH 1/10W 15K	1	
R7321		ERJ6GEYJ103	M.RESISTOR CH 1/10W 10K	1	
R7322		ERJ6GEYJ102	M.RESISTOR CH 1/10W 1K	1	
R7323		ERJ6GEYJ103	M.RESISTOR CH 1/10W 10K	1	
R7324,25		ERJ6GEYJ271	M.RESISTOR CH 1/10W 270	2	
R7329		ERJ6GEYJ102	M.RESISTOR CH 1/10W 1K	1	
R7330		ERJ6GEYJ332	M.RESISTOR CH 1/10W 3.3K	1	
R7334-36		ERJ6GEYJ471	M.RESISTOR CH 1/10W 470	3	
R7337		ERJ6GEYJ271	M.RESISTOR CH 1/10W 270	1	
R7338		ERJ6GEYJ182	M.RESISTOR CH 1/10W 1.8K	1	
R7339		ERJ6GEYJ330	M.RESISTOR CH 1/10W 33	1	
R7340		ERJ6GEYJ152	M.RESISTOR CH 1/10W 1.5K	1	
R7341		ERJ6GEYJ681	M.RESISTOR CH 1/10W 680	1	
R7342		ERJ6GEYJ103	M.RESISTOR CH 1/10W 10K	1	
R7345		ERJ6GEYJ182	M.RESISTOR CH 1/10W 1.8K	1	
R7346		ERJ6GEYJ221	M.RESISTOR CH 1/10W 220	1	
R7347		ERJ6GEYJ681	M.RESISTOR CH 1/10W 680	1	
R7348		ERJ6GEYJ222	M.RESISTOR CH 1/10W 2.2K	1	
R7349		ERJ6GEYJ102	M.RESISTOR CH 1/10W 1K	1	
R7351		ERJ6GEYJ103	M.RESISTOR CH 1/10W 10K	1	
R7352,53		ERJ6GEYJ473	M.RESISTOR CH 1/10W 47K	2	
R7354,55		ERJ6GEYJ102	M.RESISTOR CH 1/10W 1K	2	
R7356		ERJ6GEYJ152	M.RESISTOR CH 1/10W 1.5K	1	
R7357		ERJ6GEYJ821	M.RESISTOR CH 1/10W 820	1	
R7358,59		ERJ6GEYJ103	M.RESISTOR CH 1/10W 10K	2	
R7651		ERDS2TJ332	C.RESISTOR 1/4W 3.3K	1	
R7654		ERJ6GEYJ562	M.RESISTOR CH 1/10W 5.6K	1	
R7655		ERJ6GEYJ472	M.RESISTOR CH 1/10W 4.7K	1	
R7656		ERJ6GEYG151	M.RESISTOR CH 1/10W 150	1	
R7657		ERJ6GEYJ104	M.RESISTOR CH 1/10W 100K	1	
R7658		ERJ6GEYJ393	M.RESISTOR CH 1/10W 39K	1	
R7659		ERJ6GEYJ822	M.RESISTOR CH 1/10W 8.2K	1	
R7661		ERJ6GEYJ562	M.RESISTOR CH 1/10W 5.6K	1	
R7662		ERJ6GEYJ393	M.RESISTOR CH 1/10W 39K	1	
R7663		ERJ6GEYJ222	M.RESISTOR CH 1/10W 2.2K	1	
R7664		ERJ6GEYJ332	M.RESISTOR CH 1/10W 3.3K	1	
R7671,72		ERJ6GEYJ473	M.RESISTOR CH 1/10W 47K	2	
R7673		ERJ6GEYJ104	M.RESISTOR CH 1/10W 100K	1	
R7674		ERJ6GEYF124	M.RESISTOR CH 1/10W 120K	1	
R7675		ERJ6GEYJ103	M.RESISTOR CH 1/10W 10K	1	
R7676		ERG1SJ152	M.RESISTOR 1W 1.5K	1	
R7677		ERDS2TJ103	C.RESISTOR 1/4W 10K	1	
R7678		ERJ6GEYJ223	M.RESISTOR CH 1/10W 22K	1	
R7679		ERDS2TJ100	C.RESISTOR 1/4W 10	1	
R7680		ERJ6GEYJ102	M.RESISTOR CH 1/10W 1K	1	
R7681,82		ERJ6GEYJ473	M.RESISTOR CH 1/10W 47K	2	
R7683		ERJ6GEYJ563	M.RESISTOR CH 1/10W 56K	1	
R7684		ERJ6GEYJ393	M.RESISTOR CH 1/10W 39K	1	
R7691		ERJ6GEYJ103	M.RESISTOR CH 1/10W 10K	1	
R7692		ERJ6GEYJ104	M.RESISTOR CH 1/10W 100K	1	
R7694		ERJ6GEYJ103	M.RESISTOR CH 1/10W 10K	1	
R7695		ERJ6GEYJ562	M.RESISTOR CH 1/10W 5.6K	1	
R7696		ERJ6GEYJ473	M.RESISTOR CH 1/10W 47K	1	
SW3901		VSS0233	SWITCH	1	
T703		EIV5EC021A	TRANSFORMER	1	
T704		EIV5EC020A	TRANSFORMER	1	
T881		ELM7Q207A	TRANSFORMER	1	
T4001		EIQ7QF014Q	TRANSFORMER	1	
T7301		EIR7QG001B	TRANSFORMER	1	
T7302,03		EIL7QH012Q	TRANSFORMER	2	
T7304		EIS5EC023A	TRANSFORMER	1	
T7305		EIS5EC024A	TRANSFORMER	1	
TR		VJS3481	CONNECTOR (FEMALE)	1	
VR701,02		EVNCBAA00B23	V.RESISTOR	2	

Ref.No.		Part No.	Part Name & Description	Pcs	Remarks
VR741		EVNCBAA00B14	V.RESISTOR	1	
VR801,02		EVTEASA00B13	V.RESISTOR	2	
VR803		EVNCBAA00B14	V.RESISTOR	1	
VR2001		EVNDXAA00B54	V.RESISTOR 50K	1	
VR2006		EVNDXAA00B15	V.RESISTOR 100K	1	
VR2011		EVNDXAA00B15	V.RESISTOR 100K	1	
VR3001		EVNDXAA00B23	V.RESISTOR 5K	1	
VR3012,13		EVNDXAA00B52	V.RESISTOR 500	2	
VR4001		EVNDXAA00B25	V.RESISTOR 200K	1	
VR4501		EVMECSA00B53	V.RESISTOR	1	
VR4502		EVMEASA00BY4	V.RESISTOR	1	
VR4507		EVMEASA00BY4	V.RESISTOR	1	
VR4509		EVMECSA00BY3	V.RESISTOR	1	
VR4550		EVMECSA00BS3	V.RESISTOR	1	
VR4551,52		EVMEASA00B55	V.RESISTOR	2	
VR7301		EVMEASA00B14	V.RESISTOR	1	
VR7326		EVMEASA00B52	V.RESISTOR	1	
VR7328		EVMEASA00B52	V.RESISTOR	1	
VR7340		EVNCBAA00B14	V.RESISTOR	1	
VR7342		EVNCBAA00B53	V.RESISTOR	1	
VR7344		EVNCBAA00B14	V.RESISTOR	1	
VR7660		EVN38CA00B23	V.RESISTOR 2K	1	
VR8001		EVNDXAA00B23	V.RESISTOR 5K	1	
X710		EFCH38MSP32	CRYSTAL OSCILLATOR	1	
X711		EFCS3F02W3B	CRYSTAL OSCILLATOR	1	
X801		VSX0162	CRYSTAL OSCILLATOR	1	
X3001		VSX0099	CRYSTAL OSCILLATOR	1	
X6001		VSX0609	CRYSTAL OSCILLATOR	1	
X7301,02		EFCS6R0YS5R	CRYSTAL OSCILLATOR	2	
X7303,04		EFCS5R74MS5B	CRYSTAL OSCILLATOR	2	
X7305		ELB5A016	CRYSTAL OSCILLATOR	1	
X7307		VSX0547	CRYSTAL OSCILLATOR	1	
		ENC17991A	RF CONVERTER	1	<!>
		VJH0740	I/O JACK PLATE	1	
		VEE8474	WIRE CABLE	1	(P2001-P2902)
		VEE8564	WIRE CABLE	1	(P2003-POWER TR.)
		VEE8969	WIRE CABLE	1	(P4002-FE HEAD)
		VWJ25C9200BB	FLAT CARD CABLE	1	(P6001-P7501)
		VWJ12C9200BB	FLAT CARD CABLE	1	(P6002-P7502)
		VWJ0745	FLAT CARD CABLE	1	(P3001-P501)
		VWJ0746	FLAT CARD CABLE	1	(P6004-P1505)
		VWJ0825	FLAT CARD CABLE	1	(P2002-CAPSTAN)
		VWJ0826B	FLAT CARD CABLE	1	(P1001-P1102)
		VJF1031	CLAMPER	1	
		ENV598B1H3	TUNER	1	<!>FOR TV DEMODU.
		VSC4025	SHIELD COVER (MAIN)	1	FOR TV DEMODULATOR
		VSC3241	SHIELD COVER (TOP)	1	FOR TV DEMODULATOR
		VSC2714	SHIELD COVER (BOTTOM)	1	FOR TV DEMODULATOR
	■	VEX0128	CYLINDER DRIVE C.B.A.		(RTL)
C2901-03		ECEA1VSN2R2	E.CAPACITOR 35V 2.2U	3	
C2904-06		ECUM1E104KBM	C.CAPACITOR CH 25V 0.1U	3	
C2907		ECUM1E683KBM	C.CAPACITOR CH 25V 0.068U	1	
C2908		ECUM1E473KBM	C.CAPACITOR CH 25V 0.047U	1	
C2910		ECEA1CKS100	E.CAPACITOR 16V 10U	1	
IC2901		AN3815K	IC	1	
P2901		VJP2603W	CONNECTOR (MALE)	1	
P2902		VJP1232T	CONNECTOR (MALE) 5P	1	
R2901		ERX12SJR47	M.RESISTOR 1/12W 0.47U	1	

Ref.No.		Part No.	Part Name & Description	Pcs	Remarks
			MISCELLANEOUS		
		VMA8089	MAIN HOLDER	1	
		VEP05176C	HEAD AMP C.B.A.		(RTL)
C503		ECUM1C105ZFN	C.CAPACITOR CH 16V 1U	1	
C505-08		ECUM1H103ZFN	C.CAPACITOR CH 50V 0.01U	4	
C509		ECUM1H332KBN	C.CAPACITOR CH 50V 3300P	1	
C510,11		ECUM1H104ZFN	C.CAPACITOR CH 50V 0.1U	2	
C512		ECUM1H102KBN	C.CAPACITOR CH 50V 1000P	1	
C513		ECUM1H104ZFN	C.CAPACITOR CH 50V 0.1U	1	
C514		ECUM1H103ZFN	C.CAPACITOR CH 50V 0.01U	1	
C515,16		ECUM1H104ZFN	C.CAPACITOR CH 50V 0.1U	2	
C517,18		ECUM1H103ZFN	C.CAPACITOR CH 50V 0.01U	2	
C519,20		ECUM1H104ZFN	C.CAPACITOR CH 50V 0.1U	2	
C521		ECUM1H103ZFN	C.CAPACITOR CH 50V 0.01U	1	
C523-25		ECUM1H103ZFN	C.CAPACITOR CH 50V 0.01U	3	
C526		VCEA0JAC221	E.CAPACITOR 6.3V 220U	1	
C527		ECUM1H102KBN	C.CAPACITOR CH 50V 1000P	1	
C540		ECEA1CK470	E.CAPACITOR 16V 47U	1	
C551		ECUM1H102KBN	C.CAPACITOR CH 50V 1000P	1	
C552-54		ECUM1H103ZFN	C.CAPACITOR CH 50V 0.01U	3	
C555		ECEA0JPK221	E.CAPACITOR 6.3V 220U	1	
C556,57		ECUM1H103ZFN	C.CAPACITOR CH 50V 0.01U	2	
C559		ECUM1C105ZFN	C.CAPACITOR CH 16V 1U	1	
C560,61		ECUM1H471JCN	C.CAPACITOR CH 50V 470P	2	
C562,63		ECUM1H101JCN	C.CAPACITOR CH 50V 100P	2	
C564		ECUM1C105ZFN	C.CAPACITOR CH 16V 1U	1	
C565		ECUM1H101JCN	C.CAPACITOR CH 50V 100P	1	
C566		ECUM1H104ZFN	C.CAPACITOR CH 50V 0.1U	1	
C567		ECUM1H102KBN	C.CAPACITOR CH 50V 1000P	1	
C569		ECUM1C105ZFN	C.CAPACITOR CH 16V 1U	1	
IC501		AN3336SB	IC	1	
IC551		BA7743FS	IC	1	
L501,02		VLQ0540K330	COIL 33UH	2	
L551,52		VLQ0540K330	COIL 33UH	2	
P501		VJS3537B020G	CONNECTOR (FEMALE) 20P	1	
P502		VJS2603	CONNECTOR (FEMALE)	1	
QR501		MRN2404	TRANSISTOR-RESISTOR	1	
R501		ERJ6GMYJ101	M.RESISTOR CH 1/10W 100	1	
R502		ERJ6GEYJ152	M.RESISTOR CH 1/10W 1.5K	1	
R503		ERJ6GMYG752	M.RESISTOR CH 1/10W 7.5K	1	
R504		ERJ6GMYJ333	M.RESISTOR CH 1/10W 33K	1	
R505		ERJ6GMYJ182	M.RESISTOR CH 1/10W 1.8K	1	
R506		ERJ6GMYJ392	M.RESISTOR CH 1/10W 3.9K	1	
R507		ERJ6GMYJ391	M.RESISTOR CH 1/10W 390	1	
R508		ERJ6GMYJ331	M.RESISTOR CH 1/10W 330	1	
R509-12		ERJ6GMYJ101	M.RESISTOR CH 1/10W 100	4	
R513		ERJ6GMYJ103	M.RESISTOR CH 1/10W 10K	1	
R514		ERJ6GMYJ274	M.RESISTOR CH 1/10W 270K	1	
R517		ERJ6GMYJ100	M.RESISTOR CH 1/10W 10	1	
R526		ERJ6GMYG133	M.RESISTOR CH 1/10W 13K	1	
R551		ERJ6GMYJ473	M.RESISTOR CH 1/10W 47K	1	
R552		ERJ6GMYJ391	M.RESISTOR CH 1/10W 390	1	
R553		ERJ6GMYJ273	M.RESISTOR CH 1/10W 27K	1	
R554		ERJ6GMYJ243	M.RESISTOR CH 1/10W 24K	1	
R556		ERJ6GMYJ333	M.RESISTOR CH 1/10W 33K	1	
R557		ERJ6GMYJ103	M.RESISTOR CH 1/10W 10K	1	
R558		ERJ6GMYJ332	M.RESISTOR CH 1/10W 3.3K	1	
R559,60		ERJ6GMYJ152	M.RESISTOR CH 1/10W 1.5K	2	
R561		ERJ6GMYJ332	M.RESISTOR CH 1/10W 3.3K	1	
R562		ERJ6GMYJ102	M.RESISTOR CH 1/10W 1K	1	

Ref.No.		Part No.	Part Name & Description	Pcs	Remarks
R563		VRE0034E100	M.RESISTOR CH 1/10W 10	1	
R564		ERJ6GMYJ224	M.RESISTOR CH 1/10W 220K	1	
R565		ERJ6GMYJ473	M.RESISTOR CH 1/10W 47K	1	
R566		ERJ6GMYJ273	M.RESISTOR CH 1/10W 27K	1	
R567		ERJ6GMYJ153	M.RESISTOR CH 1/10W 15K	1	
R568		ERJ6GMYJ271	M.RESISTOR CH 1/10W 270	1	
R569		ERJ6GEYJ102	M.RESISTOR CH 1/10W 1K	1	
R570		ERJ6GMYJ102	M.RESISTOR CH 1/10W 1K	1	
			MISCELLANEOUS		
		VSC3714	SHILED COVER (TOP)	1	
		VSC3478	SHILED COVER (MAIN)	1	
		VSC3715	SHILED COVER (BOTTOM)	1	
		VEP06931B	OPERATION C.B.A.		(RTL)
D6501,02		1SS254	DIODE	2	
PS6501		VJS3405A009A	CONNECTOR (FEMALE) 9P	1	
SW6501,02		EVQ11409K	SWITCH	2	
		VEP07675C	NICAM DECORDER C.B.A.		(RTL)NV-HD77AM
C7901-03		ECUX1H103ZFV	C.CAPACITOR CH 50V 0.01U	3	
C7904		ECEA1CK470	E.CAPACITOR 16V 47U	1	
C7905		ECUX1H103ZFV	C.CAPACITOR CH 50V 0.01U	1	
C7906		ECEA1CK470	E.CAPACITOR 16V 47U	1	
C7907		ECUX1H103ZFV	C.CAPACITOR CH 50V 0.01U	1	
C7908		ECQV1H104JM	P.CAPACITOR 50V 0.1U	1	
C7909		ECUX1H103ZFV	C.CAPACITOR CH 50V 0.01U	1	
C7910		ECEA1CK100	E.CAPACITOR 16V 10U	1	
C7911-13		ECUX1H103ZFV	C.CAPACITOR CH 50V 0.01U	3	
C7914		ECEA0JK470	E.CAPACITOR 6.3V 47U	1	
C7915		ECUX1H100DCV	C.CAPACITOR CH 50V 10P	1	
C7916		ECUX1H103ZFV	C.CAPACITOR CH 50V 0.01U	1	
C7917		ECEA0JK470	E.CAPACITOR 6.3V 47U	1	
C7918		ECUX1H103ZFV	C.CAPACITOR CH 50V 0.01U	1	
C7919		ECEA0JK470	E.CAPACITOR 6.3V 47U	1	
C7920		ECEA1CK100	E.CAPACITOR 16V 10U	1	
C7921		ECQB1H102JH	P.CAPACITOR 50V 1000P	1	
C7922		ECQB1H272JH	P.CAPACITOR 50V 2700P	1	
C7923		ECUX1H151JCV	C.CAPACITOR CH 50V 150P	1	
C7924		ECEA1CKN100	E.CAPACITOR 16V 10U	1	
C7925		ECUX1H561JCV	C.CAPACITOR CH 50V 560P	1	
C7926		ECEA1CK100	E.CAPACITOR 16V 10U	1	
C7927		ECQB1H102JH	P.CAPACITOR 50V 1000P	1	
C7928		ECQB1H272JH	P.CAPACITOR 50V 2700P	1	
C7929		ECUX1H151JCV	C.CAPACITOR CH 50V 150P	1	
C7930		ECEA1CKN100	E.CAPACITOR 16V 10U	1	
C7931		ECUX1H561JCV	C.CAPACITOR CH 50V 560P	1	
C7932,33		ECEA1CKN100	E.CAPACITOR 16V 10U	2	
C7934		ECUX1H220JCV	C.CAPACITOR CH 50V 22P	1	
C7935		ECUX1H470JCV	C.CAPACITOR CH 50V 47P	1	
C7937		ECUX1H103ZFV	C.CAPACITOR CH 50V 0.01U	1	
C7938		ECEA1HKR47	E.CAPACITOR 50V 0.47U	1	
C7939,40		ECEA1HKN0R1	E.CAPACITOR 50V 0.1U	2	
C7941		ECEA1HKR47	E.CAPACITOR 50V 0.47U	1	
C7942		ECUX1H103ZFV	C.CAPACITOR CH 50V 0.01U	1	
C7943		ECUX1H100DCV	C.CAPACITOR CH 50V 10P	1	
C7945		ECUX1H101JCV	C.CAPACITOR CH 50V 100P	1	
C7946		ECUX1H220JCV	C.CAPACITOR CH 50V 22P	1	
C7947		ECEA1HKR47	E.CAPACITOR 50V 0.47U	1	
C7948		ECUX1H103ZFV	C.CAPACITOR CH 50V 0.01U	1	
C7949		ECEA0JK330	E.CAPACITOR 6.3V 33U	1	
C7950-53		ECEA1CKN100	E.CAPACITOR 16V 10U	4	

Ref.No.		Part No.	Part Name & Description	Pcs	Remarks
C7954		ECEA1CK470	E.CAPACITOR 16V 47U	1	
C7955-60		ECEA1CK100	E.CAPACITOR 16V 10U	6	
C7961		ECUX1H103ZFV	C.CAPACITOR CH 50V 0.01U	1	
C7963		ECUX1H103ZFV	C.CAPACITOR CH 50V 0.01U	1	
C7964		ECEA1CK100	E.CAPACITOR 16V 10U	1	
C7965,66		ECUX1H103ZFV	C.CAPACITOR CH 50V 0.01U	2	
C7967		ECEA1CK100	E.CAPACITOR 16V 10U	1	
D7901-03		MA141WK	DIODE	3	
D7904		MA141K	DIODE	1	
D7905		MA141WA	DIODE	1	
D7906		MA141WK	DIODE	1	
D7907		MA141K	DIODE	1	
FL7901		VLF0703	FILTER	1	
FL7902		ELKAW103EB	FILTER	1	
FL7904-11		ELKAW103EB	FILTER	8	
FL7912-15		ELKAW101GB	FILTER	4	
FL7916		VLF0633	FILTER	1	
FL7918		ELKAW103EB	FILTER	1	
IC7901		TB1204F	IC	1	
IC7902		TA2009F	IC	1	
IC7903		M5238FP	IC	1	
L7901,02		VLP0083	COIL	2	
P7901		VJP1237R	CONNECTOR (MALE) 10P	1	
P7902		VJP1237T	CONNECTOR (MALE) 10P	1	
Q7901,02		MSD601	TRANSISTOR	2	
Q7903		2SC3931CD	TRANSISTOR	1	
Q7904-07		2SB1219	TRANSISTOR	4	
Q7908,09		2SC3929	TRANSISTOR	2	
Q7910,11		2SD1820	TRANSISTOR	2	
Q7912		2SB1219	TRANSISTOR	1	
Q7913		2SB1218-Q	TRANSISTOR	1	
Q7914,15		2SD1979-S	TRANSISTOR	2	
Q7916,17		2SB1219	TRANSISTOR	2	
QR7901,02		UN5213	TRANSISTOR-RESISTOR	2	
QR7903		UN5112	TRANSISTOR-RESISTOR	1	
QR7904		UN5214	TRANSISTOR-RESISTOR	1	
QR7905,06		UN5213	TRANSISTOR-RESISTOR	2	
R7901		ERJ3GEYJ471	M.RESISTOR CH 1/16W 470	1	
R7902		ERJ3GEYJ821	M.RESISTOR CH 1/16W 820	1	
R7903		ERJ3GEYJ472	M.RESISTOR CH 1/16W 4.7K	1	
R7904		ERJ6GEYJ152	M.RESISTOR CH 1/10W 1.5K	1	
R7905		ERJ6GEYJ471	M.RESISTOR CH 1/10W 470	1	
R7906		ERJ6GEYJ150	M.RESISTOR CH 1/10W 15	1	
R7907		ERJ6GEYJ561	M.RESISTOR CH 1/10W 560	1	
R7908		ERJ6GEYJ152	M.RESISTOR CH 1/10W 1.5K	1	
R7909-12		ERJ6GEYJ331	M.RESISTOR CH 1/10W 330	4	
R7913-15		ERJ3GEYJ682	M.RESISTOR CH 1/16W 6.8K	3	
R7917		ERJ3GEYJ103	M.RESISTOR CH 1/16W 10K	1	
R7918-21		ERJ3GEYJ473	M.RESISTOR CH 1/16W 47K	4	
R7922		ERJ3GEYJ563	M.RESISTOR CH 1/16W 56K	1	
R7923		ERJ3GEYJ394	M.RESISTOR CH 1/16W 390K	1	
R7924-26		ERJ3GEYJ103	M.RESISTOR CH 1/16W 10K	3	
R7927		ERJ3GEYJ562	M.RESISTOR CH 1/16W 5.6K	1	
R7928		ERJ3GEYJ102	M.RESISTOR CH 1/16W 1K	1	
R7929		ERJ3GEYJ563	M.RESISTOR CH 1/16W 56K	1	
R7930		ERJ3GEYJ394	M.RESISTOR CH 1/16W 390K	1	
R7931-33		ERJ3GEYJ103	M.RESISTOR CH 1/16W 10K	3	
R7934		ERJ3GEYJ562	M.RESISTOR CH 1/16W 5.6K	1	
R7935		ERJ3GEYJ102	M.RESISTOR CH 1/16W 1K	1	

Ref.No.		Part No.	Part Name & Description	Pcs	Remarks
R7936		ERJ3GEYJ223	M.RESISTOR CH 1/16W 22K	1	
R7937		ERJ3GEYJ393	M.RESISTOR CH 1/16W 39K	1	
R7938		ERJ3GEYJ222	M.RESISTOR CH 1/16W 2.2K	1	
R7939		ERJ3GEYJ224	M.RESISTOR CH 1/16W 220K	1	
R7940		ERJ3GEYJ181	M.RESISTOR CH 1/16W 180	1	
R7941		ERJ3GEYJ681	M.RESISTOR CH 1/16W 680	1	
R7942		ERJ3GEYJ393	M.RESISTOR CH 1/16W 39K	1	
R7943		ERJ3GEYJ473	M.RESISTOR CH 1/16W 47K	1	
R7944		ERJ3GEYJ392	M.RESISTOR CH 1/16W 3.9K	1	
R7945		ERJ3GEYJ822	M.RESISTOR CH 1/16W 8.2K	1	
R7946,47		ERJ3GEYJ473	M.RESISTOR CH 1/16W 47K	2	
R7948		ERJ3GEYJ472	M.RESISTOR CH 1/16W 4.7K	1	
R7949		ERJ3GEYJ822	M.RESISTOR CH 1/16W 8.2K	1	
R7950		ERJ3GEYJ472	M.RESISTOR CH 1/16W 4.7K	1	
R7951,52		ERJ3GEYJ822	M.RESISTOR CH 1/16W 8.2K	2	
R7953		ERJ3GEYJ472	M.RESISTOR CH 1/16W 4.7K	1	
R7954,55		ERJ3GEYJ823	M.RESISTOR CH 1/16W 82K	2	
R7956		ERJ3GEYJ822	M.RESISTOR CH 1/16W 8.2K	1	
R7957		ERJ3GEYJ472	M.RESISTOR CH 1/16W 4.7K	1	
R7958,59		ERJ3GEYJ823	M.RESISTOR CH 1/16W 82K	2	
R7960,61		ERJ6GEYJ471	M.RESISTOR CH 1/10W 470	2	
R7964		ERJ3GEYJ272	M.RESISTOR CH 1/16W 2.7K	1	
R7965-72		ERJ3GEYJ101	M.RESISTOR CH 1/16W 100	8	
R7973-77		ERJ3GEYJ103	M.RESISTOR CH 1/16W 10K	5	
R7978		ERJ3GEYJ104	M.RESISTOR CH 1/16W 100K	1	
R7979		ERJ3GEYJ152	M.RESISTOR CH 1/16W 1.5K	1	
R7980		ERJ3GEYJ104	M.RESISTOR CH 1/16W 100K	1	
R7981,82		ERJ3GEYJ102	M.RESISTOR CH 1/16W 1K	2	
R7983,84		ERJ3GEYJ103	M.RESISTOR CH 1/16W 10K	2	
R7985,86		ERJ3GEYJ271	M.RESISTOR CH 1/16W 270	2	
R7987		ERJ3GEYJ563	M.RESISTOR CH 1/16W 56K	1	
R7988		ERJ3GEYJ121	M.RESISTOR CH 1/16W 120	1	
R7989		ERDS2TJ823	C.RESISTOR 1/4W 82K	1	
VR7901,02		EVNCBAA00B14	V.RESISTOR	2	
VR7903		EVTEASA00B55	V.RESISTOR	1	
X7901		VSX0514	CRYSTAL OSCILLATOR	1	
X7902		VSX0512	CRYSTAL OSCILLATOR	1	
X7903		EFCA5504BF	CRYSTAL OSCILLATOR	1	
			MISCELLANEOUS		
		VSC3553	SHIELD COVER (MAIN)	1	
		VSC3554	SHIELD COVER (TOP)	1	
		VSC3555	SHIELD COVER (BOTTOM)	1	
	■	VEP07752N	TIMER C.B.A.		(RTL)NV-HD70AM
C1701		ECEA1CKA101	E.CAPACITOR 16V 100U	1	
C1702		ECUM1H103ZFN	C.CAPACITOR CH 50V 0.01U	1	
C1703		ECKD2H471KB	E.CAPACITOR 500V 470P	1	
C1704		ECEA1VKA220	E.CAPACITOR 35V 22U	1	
C1705		ECKF1H103ZF	C.CAPACITOR 50V 0.01U	1	
C1706		ECUM1H104ZFN	C.CAPACITOR CH 50V 0.1U	1	
C1707		ECEA0JK221	E.CAPACITOR 6.3V 220	1	
C1708		ECUM1H103ZFN	C.CAPACITOR CH 50V 0.01U	1	
C7501		ECRHA030E54R	V.CAPACITOR	1	
C7502		ECEA0JKA221	E.CAPACITOR 6.3V 220U	1	
C7503		ECEA1HKA220	E.CAPACITOR 50V 22U	1	
C7504		ECUM1H104ZFN	C.CAPACITOR CH 50V 0.1U	1	
C7505		ECUM1H100DCN	C.CAPACITOR CH 50V 10P	1	
C7506		ECUM1H103ZFN	C.CAPACITOR CH 50V 0.01U	1	
C7507,08		ECUM1H220JCN	C.CAPACITOR CH 50V 22P	2	
C7509		ERJ6GMZ0R00	M.RESISTOR 1/10W 0	1	
C7510		ECA0JM471	E.CAPACITOR 6.3V 470U	1	
C7511		EECS5R5T473	C.CAPACITOR 5.5V 0.047F	1	
C7513		ECUM1H821JCN	C.CAPACITOR CH 50V 820P	1	
C7514		ECUM1H221JCN	C.CAPACITOR CH 50V 220P	1	
C7517,18		ECEA0JKS470	E.CAPACITOR 6.3V 47U	2	

Ref.No.		Part No.	Part Name & Description	Pcs	Remarks
C7519		ECUM1H103ZFN	C.CAPACITOR CH 50V 0.01U	1	
C7522		ECUM1H103ZFN	C.CAPACITOR CH 50V 0.01U	1	
C7523		ECUM1H104ZFN	C.CAPACITOR CH 50V 0.1U	1	
D1701		MA1270-H	DIODE	1	
D1702		1SS254	DIODE	1	
D1703		11EQS04	DIODE	1	
D7501		MA3075	DIODE	1	
D7506-08		MA221	DIODE	3	
D7517		MA221	DIODE	1	
D7519,20		MA221	DIODE	2	
D7523-31		1SS254	DIODE	9	
D7534-36		LN81RCPHLULS	DIODE	3	
D7538		LN81RCPHLULS	DIODE	1	
D7543,44		1SS254	DIODE	2	
D7546,47		1SS254	DIODE	2	
D7549		1SS254	DIODE	1	
DP7501		VSL0316	DISPLAY TUBE	1	
IC7501		MN187164VZCB	IC	1	
IC7502		PST7026	IC	1	
IC7503		M6M80011AP	IC	1	
IC7504		PST7043	IC	1	
IR7501		VEK6407	IR RECEIVER UNIT	1	
L1701		VLQ0599J680	COIL	1	
L7501		VLQ0599J101	COIL 100UH	1	
P7501		VJS3537B025G	CONNECTOR (FEMALE) 25P	1	
P7502		VJS3537B012G	CONNECTOR (FEMALE) 12P	1	
PP7501		VJP3405A009W	CONNECTOR (MALE) 9P	1	
Q1701		2SD973A-R	TRANSISTOR	1	
Q7501		2SD1996	TRANSISTOR	1	
Q7502		MSB710	TRANSISTOR	1	
QR7501,02		MRN2402	TRANSISTOR-RESISTOR	2	
QR7503-05		MRN1404	TRANSISTOR-RESISTOR	3	
QR7508		MRN1407	TRANSISTOR-RESISTOR	1	
R1701		ERJ6GMYJ332	M.RESISTOR CH 1/10W 3.3K	1	
R1702		ERDS2TJ471	C.RESISTOR 1/4W 470	1	
R1703		ERJ6GMYJ101	M.RESISTOR CH 1/10W 100	1	
R1704		ERJ6GMZ0R00	M.RESISTOR 1/10W 0	1	
R7501		ERJ6GMYJ104	M.RESISTOR CH 1/10W 100K	1	
R7502		ERJ6GMYJ101	M.RESISTOR CH 1/10W 100	1	
R7503,04		ERJ6GMYJ391	M.RESISTOR CH 1/10W 390	2	
R7505		ERJ6GMYJ272	M.RESISTOR CH 1/10W 2.7K	1	
R7506		ERJ6GMYJ332	M.RESISTOR CH 1/10W 3.3K	1	
R7507		ERJ6GMYJ471	M.RESISTOR CH 1/10W 470	1	
R7508		ERJ6GMYJ224	M.RESISTOR CH 1/10W 220K	1	
R7510		ERJ6GMYJ181	M.RESISTOR CH 1/10W 180	1	
R7511		ERJ6GMYJ332	M.RESISTOR CH 1/10W 3.3K	1	
R7512		ERJ6GMYJ221	M.RESISTOR CH 1/10W 220	1	
R7514		ERJ6GMYJ332	M.RESISTOR CH 1/10W 3.3K	1	
R7515-18		ERJ6GMYJ221	M.RESISTOR CH 1/10W 220	4	
R7519-23		ERJ6GMYJ332	M.RESISTOR CH 1/10W 3.3K	5	
R7524,25		ERJ6GMYJ103	M.RESISTOR CH 1/10W 10K	2	
R7526,27		ERJ6GMYJ333	M.RESISTOR CH 1/10W 33K	2	
R7530-35		ERJ6GMYJ221	M.RESISTOR CH 1/10W 220	6	
R7536		ERJ6GMYJ332	M.RESISTOR CH 1/10W 3.3K	1	
R7537		ERJ6GMYJ103	M.RESISTOR CH 1/10W 10K	1	

Ref.No.		Part No.	Part Name & Description	Pcs	Remarks
R7538		ERJ6GMYJ221	M.RESISTOR CH 1/10W 220	1	
R7540		ERJ6GMYJ103	M.RESISTOR CH 1/10W 10K	1	
R7541,42		ERJ6GMYJ221	M.RESISTOR CH 1/10W 220	2	
SW7501-06		EVQ11409K	SWITCH	6	
SW7508-14		EVQ11409K	SWITCH	7	
SW7516		ESD172352	SWITCH	1	
SW7517		ESD172252	SWITCH	1	
SW7518		EVQ11409K	SWITCH	1	
T1701		ETE13K80AY	TRANSFORMER	1	
X7501		VSX0608	CRYSTAL OSCILLATOR	1	
X7502		VSX0094	CRYSTAL OSCILLATOR	1	
			MISCELLANEOUS		
		VJF1096	FIP HOLDER	1	
		VMD0504	LED HOLDER	4	
	■	VEP07752Q	TIMER C.B.A.		(RTL)NV-HD77AM
C1701		ECEA1CKA101	E.CAPACITOR 16V 100U	1	
C1702		ECUM1H103ZFN	C.CAPACITOR CH 50V 0.01U	1	
C1703		ECKD2H471KB	E.CAPACITOR 500V 470P	1	
C1704		ECEA1VKA220	E.CAPACITOR 35V 22U	1	
C1705		ECKF1H103ZF	C.CAPACITOR 50V 0.01U	1	
C1706		ECUM1H104ZFN	C.CAPACITOR CH 50V 0.1U	1	
C1707		ECEA0JK221	E.CAPACITOR 6.3V 220	1	
C1708		ECUM1H103ZFN	C.CAPACITOR CH 50V 0.01U	1	
C7501		ECRHA03OE54R	V.CAPACITOR	1	
C7502		ECEA0JKA221	E.CAPACITOR 6.3V 220U	1	
C7503		ECEA1HKA220	E.CAPACITOR 50V 22U	1	
C7504		ECUM1H104ZFN	C.CAPACITOR CH 50V 0.1U	1	
C7505		ECUM1H100DCN	C.CAPACITOR CH 50V 10P	1	
C7506		ECUM1H103ZFN	C.CAPACITOR CH 50V 0.01U	1	
C7507,08		ECUM1H220JCN	C.CAPACITOR CH 50V 22P	2	
C7509		ERJ6GM20R00	M.RESISTOR 1/10W 0	1	
C7510		ECA0JM471	E.CAPACITOR 6.3V 470U	1	
C7511		EECS5R5T473	C.CAPACITOR 5.5V 0.047F	1	
C7513		ECUM1H821JCN	C.CAPACITOR CH 50V 820P	1	
C7514		ECUM1H221JCN	C.CAPACITOR CH 50V 220P	1	
C7517,18		ECEA0JKS470	E.CAPACITOR 6.3V 47U	2	
C7519		ECUM1H103ZFN	C.CAPACITOR CH 50V 0.01U	1	
C7522		ECUM1H103ZFN	C.CAPACITOR CH 50V 0.01U	1	
C7523		ECUM1H104ZFN	C.CAPACITOR CH 50V 0.1U	1	
D1701		MA1270-H	DIODE	1	
D1702		1SS254	DIODE	1	
D1703		11EQS04	DIODE	1	
D7501		MA3075	DIODE	1	
D7506-08		MA221	DIODE	3	
D7517		MA221	DIODE	1	
D7519,20		MA221	DIODE	2	
D7523-31		1SS254	DIODE	9	
D7534-38		LN81RCPHLULS	DIODE	5	
D7543,44		1SS254	DIODE	2	
D7546,47		1SS254	DIODE	2	
D7549		1SS254	DIODE	1	
DP7501		VSL0316	DISPLAY TUBE	1	
IC7501		MN187164VZCB	IC	1	
IC7502		PST7026	IC	1	
IC7503		M6M80011AP	IC	1	
IC7504		PST7043	IC	1	

Ref.No.		Part No.	Part Name & Description	Pcs	Remarks
IR7501		VEK6407	IR RECEIVER UNIT	1	
L1701		VLQ0599J680	COIL	1	
L7501		VLQ0599J101	COIL 100UH	1	
P7501		VJS3537B025G	CONNECTOR (FEMALE) 25P	1	
P7502		VJS3537B012G	CONNECTOR (FEMALE) 12P	1	
PP7501		VJP3405A009W	CONNECTOR (MALE) 9P	1	
Q1701		2SD973A-R	TRANSISTOR	1	
Q7501		2SD1996	TRANSISTOR	1	
Q7502		MSB710	TRANSISTOR	1	
QR7501,02		MRN2402	TRANSISTOR-RESISTOR	2	
QR7503-05		MRN1404	TRANSISTOR-RESISTOR	3	
QR7508		MRN1407	TRANSISTOR-RESISTOR	1	
R1701		ERJ6GMYJ332	M.RESISTOR CH 1/10W 3.3K	1	
R1702		ERDS2TJ471	C.RESISTOR 1/4W 470	1	
R1703		ERJ6GMYJ101	M.RESISTOR CH 1/10W 100	1	
R1704		ERJ6GMZ0R00	M.RESISTOR 1/10W 0	1	
R7501		ERJ6GMYJ104	M.RESISTOR CH 1/10W 100K	1	
R7502		ERJ6GMYJ101	M.RESISTOR CH 1/10W 100	1	
R7503,04		ERJ6GMYJ391	M.RESISTOR CH 1/10W 390	2	
R7505		ERJ6GMYJ272	M.RESISTOR CH 1/10W 2.7K	1	
R7506		ERJ6GMYJ332	M.RESISTOR CH 1/10W 3.3K	1	
R7507		ERJ6GMYJ471	M.RESISTOR CH 1/10W 470	1	
R7508		ERJ6GMYJ224	M.RESISTOR CH 1/10W 220K	1	
R7510		ERJ6GMYJ181	M.RESISTOR CH 1/10W 180	1	
R7511		ERJ6GMYJ332	M.RESISTOR CH 1/10W 3.3K	1	
R7512		ERJ6GMYJ221	M.RESISTOR CH 1/10W 220	1	
R7514		ERJ6GMYJ332	M.RESISTOR CH 1/10W 3.3K	1	
R7515-18		ERJ6GMYJ221	M.RESISTOR CH 1/10W 220	4	
R7519-23		ERJ6GMYJ332	M.RESISTOR CH 1/10W 3.3K	5	
R7524,25		ERJ6GMYJ103	M.RESISTOR CH 1/10W 10K	2	
R7526,27		ERJ6GMYJ333	M.RESISTOR CH 1/10W 33K	2	
R7530-35		ERJ6GMYJ221	M.RESISTOR CH 1/10W 220	6	
R7536		ERJ6GMYJ332	M.RESISTOR CH 1/10W 3.3K	1	
R7537		ERJ6GMYJ103	M.RESISTOR CH 1/10W 10K	1	
R7538		ERJ6GMYJ221	M.RESISTOR CH 1/10W 220	1	
R7540		ERJ6GMYJ103	M.RESISTOR CH 1/10W 10K	1	
R7541,42		ERJ6GMYJ221	M.RESISTOR CH 1/10W 220	2	
SW7501-06		EVQ11409K	SWITCH	6	
SW7508-14		EVQ11409K	SWITCH	7	
SW7515		ESD172252	SWITCH	1	
SW7516		ESD172352	SWITCH	1	
SW7517		ESD172252	SWITCH	1	
SW7518		EVQ11409K	SWITCH	1	
T1701		ETE13K80AY	SWITCH	1	
X7501		VSX0608	CRYSTAL OSCILLATOR	1	
X7502		VSX0094	CRYSTAL OSCILLATOR	1	
			MISCELLANEOUS		
		VJF1096	FIP HOLDER	1	
		VMD0504	LED HOLDER	5	
	■	VEP07752M	TIMER C.B.A.		(RTL)NV-HD90EE

Ref.No.		Part No.	Part Name & Description	Pcs	Remarks
C1701		ECEA1CKA101	E.CAPACITOR 16V 100U	1	
C1702		ECUM1H103ZFN	C.CAPACITOR CH 50V 0.01U	1	
C1703		ECKD2H471KB	E.CAPACITOR 500V 470P	1	
C1704		ECEA1VKA220	E.CAPACITOR 35V 22U	1	
C1705		ECKF1H103ZF	C.CAPACITOR 50V 0.01U	1	
C1706		ECUM1H104ZFN	C.CAPACITOR CH 50V 0.1U	1	
C1707		ECEA0JK221	E.CAPACITOR 6.3V 220	1	
C1708		ECUM1H103ZFN	C.CAPACITOR CH 50V 0.01U	1	
C7501		ECRHA030E54R	V.CAPACITOR	1	
C7502		ECEA0JKA221	E.CAPACITOR 6.3V 220U	1	
C7503		ECEA1HKA220	E.CAPACITOR 50V 22U	1	
C7504		ECUM1H104ZFN	C.CAPACITOR CH 50V 0.1U	1	
C7505		ECUM1H100DCN	C.CAPACITOR CH 50V 10P	1	
C7506		ECUM1H103ZFN	C.CAPACITOR CH 50V 0.01U	1	
C7507,08		ECUM1H220JCN	C.CAPACITOR CH 50V 22P	2	
C7509		ECUM1H104ZFN	C.CAPACITOR CH 50V 0.1U	1	
C7510		ECA0JM471	E.CAPACITOR 6.3V 470U	1	
C7511		EECS5R5V104N	C.CAPACITOR	1	
C7513		ECUM1H821JCN	C.CAPACITOR CH 50V 820P	1	
C7514		ECUM1H221JCN	C.CAPACITOR CH 50V 220P	1	
C7517,18		ECEA0JKS470	E.CAPACITOR 6.3V 47U	2	
C7519		ECUM1H103ZFN	C.CAPACITOR CH 50V 0.01U	1	
C7522		ECUM1H103ZFN	C.CAPACITOR CH 50V 0.01U	1	
C7523		ECUM1H104ZFN	C.CAPACITOR CH 50V 0.1U	1	
D1701		MA1270-H	DIODE	1	
D1702		1SS254	DIODE	1	
D1703		11EQS04	DIODE	1	
D7501		MA3075	DIODE	1	
D7502		MA221	DIODE	1	
D7506,07		MA221	DIODE	2	
D7517		MA221	DIODE	1	
D7519-21		MA221	DIODE	3	
D7523-31		1SS254	DIODE	9	
D7534-36		LN81RCPHLULS	DIODE	3	
D7538		LN81RCPHLULS	DIODE	1	
D7549		1SS254	DIODE	1	
DP7501		VSL0316	DISPLAY TUBE	1	
IC7501		MN187164V2CB	IC	1	
IC7502		PST7026	IC	1	
IC7503		M6M80011AP	IC	1	
IC7504		PST7043	IC	1	
IR7501		VEK6407	IR RECEIVER UNIT	1	
L1701		VLQ0599J680	COIL	1	
L7501		VLQ0599J101	COIL 100UH	1	
P7501		VJS3537B025G	CONNECTOR (FEMALE) 25P	1	
P7502		VJS3537B012G	CONNECTOR (FEMALE) 12P	1	
PP7501		VJP3405A009W	CONNECTOR (MALE) 9P	1	
Q1701		2SD973A-R	TRANSISTOR	1	
Q7501		2SD1996	TRANSISTOR	1	
Q7502		MSB710	TRANSISTOR	1	
QR7501,02		MRN2402	TRANSISTOR-RESISTOR	2	
QR7503		MRN1404	TRANSISTOR-RESISTOR	1	
QR7508		MRN1407	TRANSISTOR-RESISTOR	1	

Ref.No.		Part No.	Part Name & Description	Pcs	Remarks
R1701		ERJ6GMYJ332	M.RESISTOR CH 1/10W 3.3K	1	
R1702		ERDS2TJ471	C.RESISTOR 1/4W 470	1	
R1703		ERJ6GMYJ101	M.RESISTOR CH 1/10W 100	1	
R1704		ERJ6GMZ0R00	M.RESISTOR 1/10W 0	1	
R7501		ERJ6GMYJ104	M.RESISTOR CH 1/10W 100K	1	
R7502		ERJ6GMYJ101	M.RESISTOR CH 1/10W 100	1	
R7503,04		ERJ6GMYJ391	M.RESISTOR CH 1/10W 390	2	
R7505		ERJ6GMYJ272	M.RESISTOR CH 1/10W 2.7K	1	
R7506		ERJ6GMYJ332	M.RESISTOR CH 1/10W 3.3K	1	
R7507		ERJ6GMYJ471	M.RESISTOR CH 1/10W 470	1	
R7508		ERJ6GMYJ224	M.RESISTOR CH 1/10W 220K	1	
R7509		ERJ6GMYJ221	M.RESISTOR CH 1/10W 220	1	
R7510		ERJ6GMYJ181	M.RESISTOR CH 1/10W 180	1	
R7511		ERJ6GMYJ332	M.RESISTOR CH 1/10W 3.3K	1	
R7512		ERJ6GMYJ221	M.RESISTOR CH 1/10W 220	1	
R7514		ERJ6GMYJ332	M.RESISTOR CH 1/10W 3.3K	1	
R7515-18		ERJ6GMYJ221	M.RESISTOR CH 1/10W 220	4	
R7519-23		ERJ6GMYJ332	M.RESISTOR CH 1/10W 3.3K	5	
R7524,25		ERJ6GMYJ103	M.RESISTOR CH 1/10W 10K	2	
R7529-35		ERJ6GMYJ221	M.RESISTOR CH 1/10W 220	7	
R7536		ERJ6GMYJ332	M.RESISTOR CH 1/10W 3.3K	1	
R7537		ERJ6GMYJ103	M.RESISTOR CH 1/10W 10K	1	
R7538		ERJ6GMYJ221	M.RESISTOR CH 1/10W 220	1	
R7540		ERJ6GMYJ103	M.RESISTOR CH 1/10W 10K	1	
R7541,42		ERJ6GMYJ221	M.RESISTOR CH 1/10W 220	2	
SW7501-06		EVQ11409K	SWITCH	6	
SW7508-14		EVQ11409K	SWITCH	7	
SW7518		EVQ11409K	SWITCH	1	
T1701		ETE13K80AY	TRANSFORMER	1	
X7501		VSX0608	CRYSTAL OSCILLATOR	1	
X7502		VSX0094	CRYSTAL OSCILLATOR	1	
			MISCELLANEOUS		
		VJF1096	FIP HOLDER	1	
		VMD0504	LED HOLDER	4	
	■	VEP01587F	POWER C.B.A.		(RTL)<!>
					NV-HD70AM/HD77AM
C1103		VCC0019	C.CARACITOR 330P	1	<!>
C1106		VCC0019	C.CAPACITOR 330P	1	<!>
C1109		VCC0022	C.CAPACITOR 1000P	1	
C1111		ECQU2A333MNB	P.CAPACITOR 250V 0.033U	1	<!>
C1112		ECEC2GG680	E.CAPACITOR 400V 68U	1	
C1113		ECQE6473KF	P.CAPACITOR 50V	1	
C1114		VCK0106K121	C.CAPACITOR	1	
C1115		ECEA1JFE470	E.CAPACITOR 63V 47U	1	
C1116		EEUFA1E681	C.CAPACITOR	1	
C1117		ECEA1DFZ681	E.CAPACITOR 20V 680U	1	
C1118,19		ECEA1AFZ681X	E.CAPACITOR 10V 680U	2	
C1121		ECCD2H101J	C.CAPACITOR 500V 100P	1	
C1122		ECQB1H473JF	P.CAPACITOR 50V 0.047U	1	
C1123		ECA1VXLV470	E.CAPACITOR 35V 47U	1	
C1124		ECKF1H271KB	E.CAPACITOR 50V 270U	1	
C1125		ECKF1H102KB	C.CAPACITOR 50V 1000P	1	
C1126		ECA0GXLV331	E.CAPACITOR 4V 330	1	
C1127		ECA1CFQ121	E.CAPACITOR 16V 120U	1	
C1128		ECA1CGE101	E.CAPACITOR 16V 100U	1	
C1129		ECKF1H103ZF	C.CAPACITOR 50V 0.01U	1	
C1130		ECKF1H102ZF	C.CAPACITOR 50V 1000P	1	
D1101		ENB461D-05A	SURGE ABSORBER 460V	1	<!>
D1102		S1WBA60S	DIODE	1	<!>
D1103		AP01C	DIODE	1	
D1104		10ELS2	DIODE	1	

Ref.No.		Part No.	Part Name & Description	Pcs	Remarks
D1105		RL4Z	DIODE	1	
D1106		31DQ04	DIODE	1	
D1107		MA185	DIODE	1	
D1108		MA178	DIODE	1	
D1109		MA723VT	DIODE	1	
D1110		MA4200H	DIODE	1	
D1111		MA185	DIODE	1	
IC1101		HA17431PA	IC	1	
IC1102		STRM6559LF	IC	1	<!>
L1102		ELF18D290A	COIL 29UH	1	<!>
L1109,10		VLQ0611K220	COIL H	2	
L1111,12		ELESE101KA	COIL 100UH	2	
L1114		VLP0074	COIL	1	
P1101		VJS2625	AC INLET	1	<!>
P1102		VJS3537B010G	CONNECTOR (FEMALE) 10P	1	
Q1101		PC120F	TRANSISTOR	1	<!>
Q1102		2SD2375	TRANSISTOR	1	
Q1103		2SD1991	TRANSISTOR	1	
QR1101		UN4213	TRANSISTOR-RESISTOR	1	
R1104		ERG3SJ683	M.RESISTOR 1/16W 68K	1	
R1105		ERDS2TJ561	C.RESISTOR 1/4W 560	1	
R1106		ERDS2TJ271	C.RESISTOR 1/4W 270	1	
R1107		ERDS2TJ272	C.RESISTOR 1/4W 2.7K	1	
R1108		ERO S2CKG2401	M.RESISTOR 1/4W 2.4K	1	
R1109		ERDS2TJ273	C.RESISTOR 1/4W 27K	1	
R1110		ERO S2CKG2701	M.RESISTOR 1/4W 2.7K	1	
R1111		ERDS2TJ153	C.RESISTOR 1/4W 15K	1	
R1112		ERDS2TJ563	C.RESISTOR 1/4W 56K	1	
R1113		ERDS2FJ101	C.RESISTOR 1/4W 100	1	
R1114		ERDS2FJ103	C.RESISTOR 1/4W 10K	1	
R1115,16		ERDS2FJ224	C.RESISTOR 1/4W 220K	2	
R1117		ERDS2FJ221	C.RESISTOR 1/4W 220	1	
R1118		ERDS2FJ471	C.RESISTOR 1/4W 470	1	
R1119		ERDS2FJ152	C.RESISTOR 1/4W 1.5K	1	
R1120		ERDS1TJ395	C.RESISTOR 1/2W 3.9M	1	
R1121		ERDS1TJ475	C.RESISTOR 1/2W 4.7M	1	
R1122		ERX1SJR82	M.RESISTOR 1W 0.82	1	
R1123		ERDS2FJ391	C.RESISTOR 1/4W 390	1	
R1124		ERDS2FJ224	C.RESISTOR 1/4W 220K	1	
R1125		ERDS1TJ472	C.RESISTOR 1/2W 4.7K	1	
R1126		ERO S2CKG2701	M.RESISTOR 1/4W 2.7K	1	
R1127		ERO S2CKG2401	M.RESISTOR 1/4W 2.4K	1	
T1101		VLT0704	TRANSFORMER	1	<!>
			MISCELLANEOUS		
		EYF52BC	FUSE HOLDER	2	<!>
		VMZ2212	CAPACITOR COVER	2	<!>
	■	VEP01587D	POWER C.B.A.		(RTL)<!>
					NV-HD90EE
C1103		VCC0021	C.CAPACITOR	1	<!>
C1106		VCC0021	C.CAPACITOR	1	<!>
C1109		VCC0022	C.CAPACITOR 1000P	1	<!>
C1110		ECQU2A563MNB	P.CAPACITOR 250V 0.056U	1	<!>
C1111		ECQU2A333MNB	P.CAPACITOR 250V 0.033U	1	<!>
C1112		ECEC2GG330	E.CAPACITOR 400V 33P	1	
C1113		ECQE6473KF	P.CAPACITOR 50V	1	

Ref.No.		Part No.	Part Name & Description	Pcs	Remarks
C1114		VCK0106K121	C.CAPACITOR	1	
C1115		ECEA1JFE470	E.CAPACITOR 63V 47U	1	
C1116		EEUFA1E681	C.CAPACITOR	1	
C1117		ECEA1DFZ681	E.CAPACITOR 20V 680U	1	
C1118,19		ECEA1AFZ681X	E.CAPACITOR 10V 680U	2	
C1121		ECCD2H101J	C.CAPACITOR 500V 100P	1	
C1122		ECQB1H473JF	P.CAPACITOR 50V 0.047U	1	
C1123		ECA1VXLV470	E.CAPACITOR 35V 47U	1	
C1124		ECKF1H271KB	E.CAPACITOR 50V 270U	1	
C1125		ECKF1H102KB	C.CAPACITOR 50V 1000P	1	
C1126		ECA0GXLV331	E.CAPACITOR 4V 330	1	
C1127		ECA1CFQ121	E.CAPACITOR 16V 120U	1	
C1128		ECA1CGE101	E.CAPACITOR 16V 100U	1	
C1129		ECKF1H103ZF	C.CAPACITOR 50V 0.01U	1	
C1130		ECKF1H102ZF	C.CAPACITOR 50V 1000P	1	
D1102		S1WBA60S	DIODE	1	<!>
D1103		AP01C	DIODE	1	
D1104		10ELS2	DIODE	1	
D1105		RL4Z	DIODE	1	
D1106		31DQ04	DIODE	1	
D1107		MA185	DIODE	1	
D1108		MA178	DIODE	1	
D1109		MA723VT	DIODE	1	
D1110		MA4200H	DIODE	1	
D1111		MA185	DIODE	1	
IC1101		HA17431PA	IC	1	
IC1102		STRM6559LF	IC	1	<!>
L1101,02		ELF18D221F	COIL	2	<!>
L1109,10		VLQ0611KZ20	COIL H	2	
L1111,12		ELESE101KA	COIL 100UH	2	
L1114		VLP0074	COIL	1	
P1101		VJS2625	AC INLET	1	<!>
P1102		VJS3537B010G	CONNECTOR (FEMALE) 10P	1	
Q1101		PC120F	TRANSISTOR	1	<!>
Q1102		2SD2375	TRANSISTOR	1	
Q1103		2SD1991	TRANSISTOR	1	
QR1101		UN4213	TRANSISTOR-RESISTOR	1	
R1104		ERG3SJ683	M.RESISTOR 1/16W 68K	1	
R1105		ERDS2TJ561	C.RESISTOR 1/4W 560	1	
R1106		ERDS2TJ271	C.RESISTOR 1/4W 270	1	
R1107		ERDS2TJ272	C.RESISTOR 1/4W 2.7K	1	
R1108		ERO S2CKG2401	M.RESISTOR 1/4W 2.4K	1	
R1109		ERDS2TJ273	C.RESISTOR 1/4W 27K	1	
R1110		ERO S2CKG2701	M.RESISTOR 1/4W 2.7K	1	
R1111		ERDS2TJ153	C.RESISTOR 1/4W 15K	1	
R1112		ERDS2TJ563	C.RESISTOR 1/4W 56K	1	
R1113		ERDS2FJ101	C.RESISTOR 1/4W 100	1	
R1114		ERDS2FJ103	C.RESISTOR 1/4W 10K	1	
R1115,16		ERDS2FJ224	C.RESISTOR 1/4W 220K	2	
R1117		ERDS2FJ221	C.RESISTOR 1/4W 220	1	
R1118		ERDS2FJ471	C.RESISTOR 1/4W 470	1	
R1119		ERDS2FJ152	C.RESISTOR 1/4W 1.5K	1	
R1120		ERDS1TJ395	C.RESISTOR 1/2W 3.9M	1	
R1121		ERDS1TJ475	C.RESISTOR 1/2W 4.7M	1	
R1122		ERX1SJR82	M.RESISTOR 1W 0.82	1	
R1123		ERDS2FJ471	C.RESISTOR 1/4W 470	1	
R1124		ERDS2FJ224	C.RESISTOR 1/4W 220K	1	
R1125		ERDS1TJ472	C.RESISTOR 1/2W 4.7K	1	
R1126		ERO S2CKG2701	M.RESISTOR 1/4W 2.7K	1	
R1127		ERO S2CKG2401	M.RESISTOR 1/4W 2.4K	1	

Ref.No.		Part No.	Part Name & Description	Pcs	Remarks
T1101		VLT0704	TRANSFORMER	1	<!>
			MISCELLANEOUS		
		EYF52BC	FUSE HOLDER	2	<!>
		VMZ2212	CAPACITOR COVER	3	<!>
	■	----------	MECHANISM CONNECTION C.B.A.		(RTL)
D1501		LN59L.VT	IC	1	
IC1501,02		ON1387	IC	2	
P1503		VJS3316A002	CONNECTOR (FEMALE) 2P	1	
P1504		VJS3317A004	CONNECTOR (FEMALE) 4P	1	
P1505		VJS3193B013A	CONNECTOR (FEMALE) 13P	1	
Q1501,02		PN205L-NC.VT	TRANSISTOR	2	
SW1501		VES0695	SAFETY SWITCH	1	
			MISCELLANEOUS		
		VMD2029	REEL GUIDE	1	
	■	----------	MOTOR C.B.A.		(RTL)
			MISCELLANEOUS		
		VJP3316B002	CONNECTOR (MALE) 2P	1	

INTERNAL REFERENCE CODES

NOTE: This chart is only for internal reference.
Do not order any parts according to these codes.

P. C. B.	FILM CODE
MAIN	H0A001-03A88
LUMINANCE & CHROMINANCE	H0A000-03975
NTSC REC(NV-HD70AM/HD77AM)	H0A002-03888
DDR SECAM(NV-HD90EE)	H0A000-03A02
POWER	H0A000-01587
SYUGO (TIMER/OPERATION)	H0A002-0243A
TV DEMODULATOR(70AM/77AM)	H0A000-07723
TV DEMODULATOR(NV-HD90EE)	H0A001-07645
NICAM DECORDER(NV-HD77AM)	H0A000-07675
DECORDER(NV-HD70AM/HD77AM)	H0A000-07725
DECORDER(NV-HD90EE)	H0A000-07743
HEAD AMP	H0A004-05176
HI-FI AUDIO	H0A000-04447
MECHANISM CONNECTION	H0A000-00S63
CYLINDER DRIVE	H0A002-00R99
LOADING MOTOR	H0A000-00S75

Panasonic

MATSUSHITA ELECTRIC

Printed in Japan